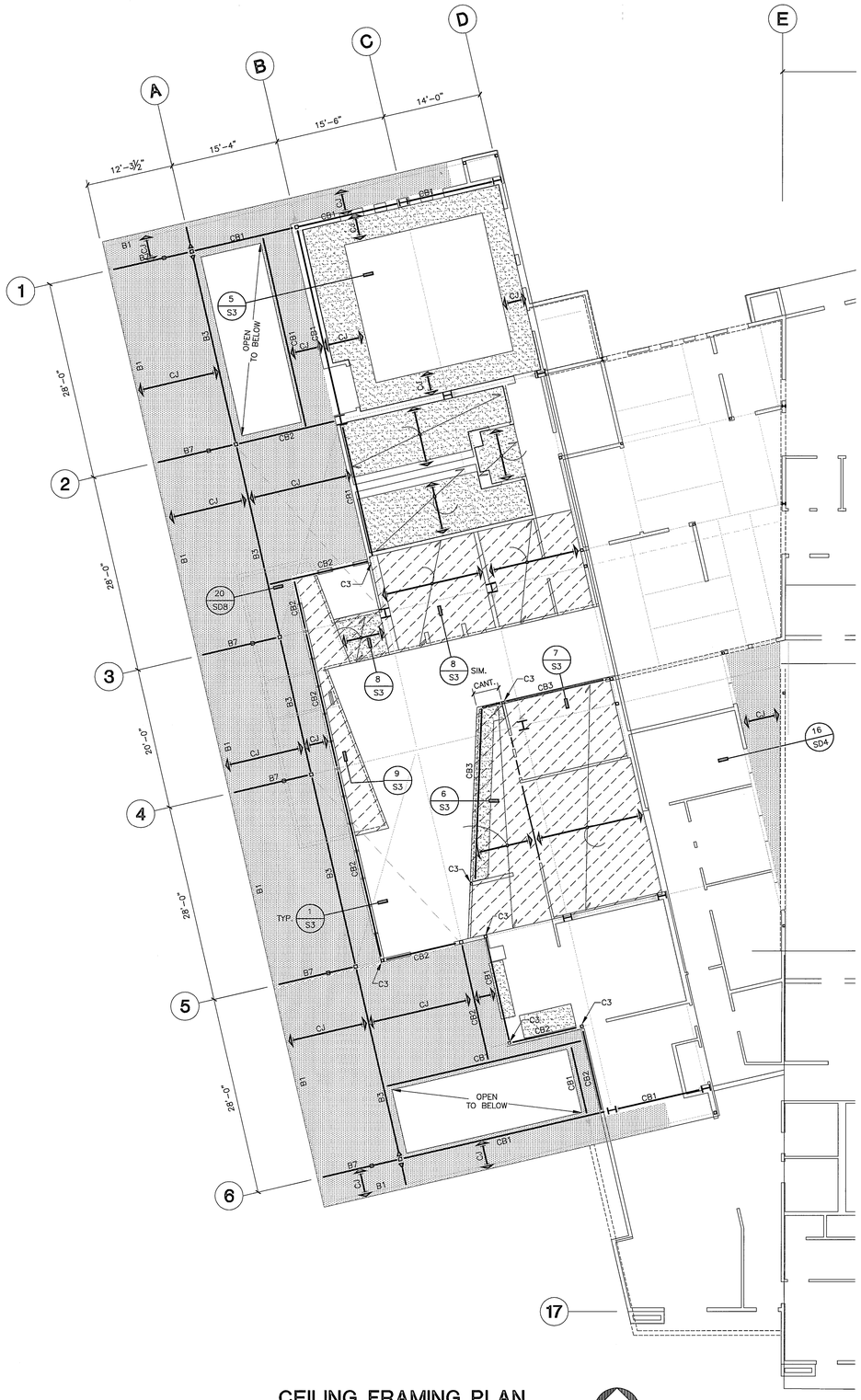

CEILING FRAMING PLAN

SCALE: 1/8"=1'-0"

NORTH

CEILING BEAM SCHEDULE

SYMBOL	BEAM	REMARKS
CB1	HSS8x6x5/16	
CB2	HSS8x6x1/4	
CB3	HSS10x4x5/16	

CEILING NOTES

1. FOR CEILING JOIST SIZE SEE DETAIL 8/SD7.
2. FOR "B" TYPE BEAMS SEE ROOF FRAMING BEAM SCHEDULE ON SHEET S4A.
3. FOR TYPICAL PARTITION WALL FRAMING AND BRACING SEE SHEET SD7.
4. PLYWOOD SHEATHING AT PLATFORM SHALL BE 19/32" STUC. I APA REATED, 40/20, EXTERIOR GLUE. ATTACH TO FRAMING MEMBERS WITH #8X1" FLAT-HEAD SELF-DRILLING SCREWS AT 6" O.C. EDGE AND AT 12" O.C. FIELD U.N.O.
5. PLYWOOD SHEATHING AT PLASTER FINISH SHALL BE 15/32", EXTERIOR GLUE. ATTACH TO FRAMING MEMBERS WITH #8X1" FLAT-HEAD SELF-DRILLING SCREWS AT 6" O.C. EDGE AND AT 12" O.C. FIELD U.N.O.

LEGEND

- PLASTER CEILING FINISH OVER PLYWOOD SHEATHING PER CEILING NOTE #5. VERIFY W/ARCH.
- GYPSUM BOARD CEILING FINISH VERIFY W/ARCH.
- PLYWOOD PLATFORM PER CEILING NOTE #4. VERIFY W/ARCH.

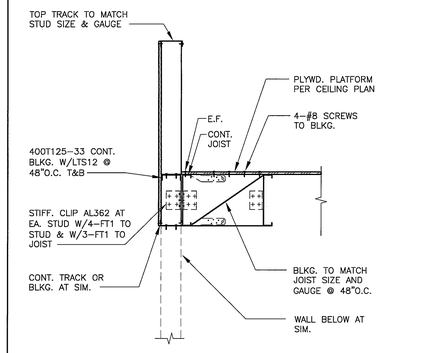

28574_D151B

SECTION SCALE 1"=1'-0" **8**

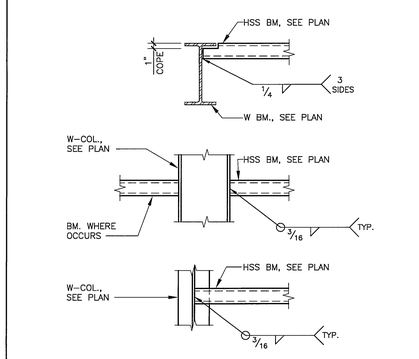

NOTE:
1. FOR BEAM SLOPES, SEE ARCH. DWGS.

28574_D147B

TYP. BEAM TO BEAM & BEAM TO COL. SCALE 1"=1'-0" **4**

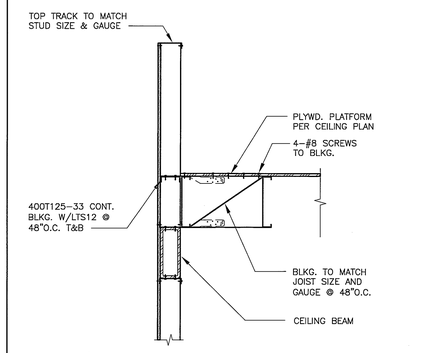

28574_D150B

SECTION SCALE 1"=1'-0" **7**

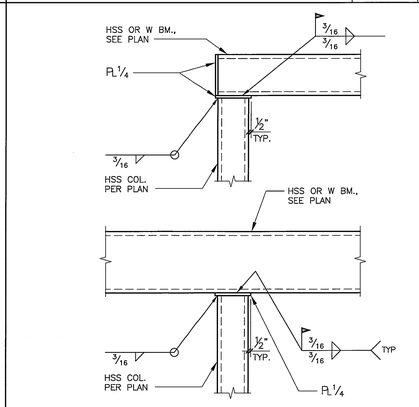

28574_D146B

TYP. BEAM TO COL. CONN. SCALE 1"=1'-0" **3**

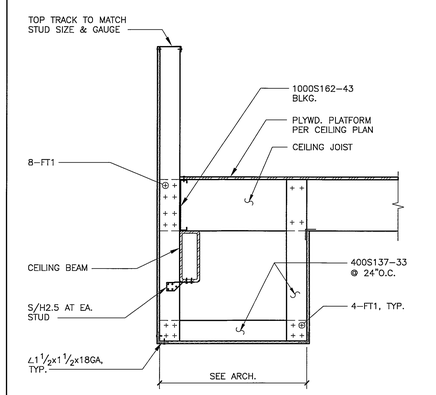

28574_D149B

SECTION SCALE 1"=1'-0" **6**

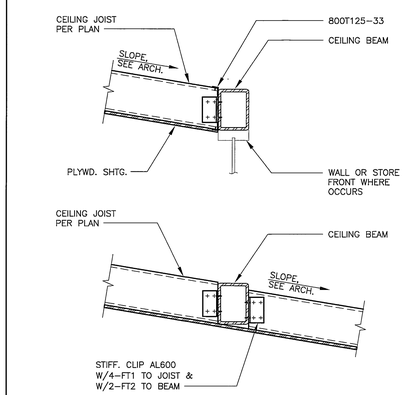

28574_D145B

TYP. CEILING JOIST TO BEAM CONN. SCALE 1"=1'-0" **2**

10

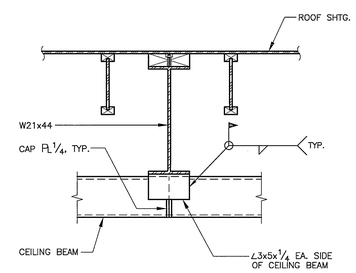

28574_D154B

SECTION SCALE 1"=1'-0" **9**

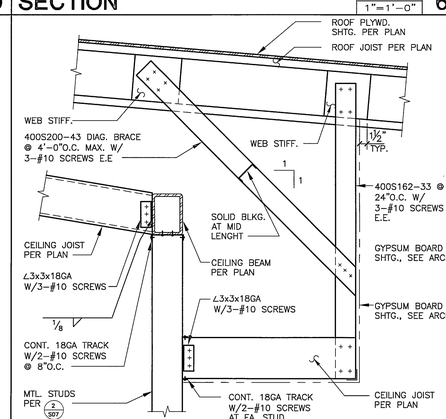

28574_D148B

SECTION SCALE 1"=1'-0" **5**

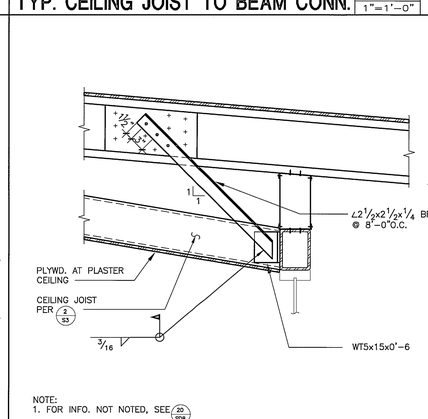

NOTE:
1. FOR INFO. NOT NOTED, SEE 20/SD8

28574_D152B

SECTION SCALE 1"=1'-0" **1**

SWATT | MIERS ARCHITECTS

5845 Doyle Street,
Suite 104
Emeryville, CA 94608
Tel: 510 985 9779
Fax: 510 985 0116

www.swattmiers.com

JAN 19 2010

BID SET

PREVAILING WAGE JOB

KSP

KSP CONSULTING ENGINEERS, INC.

25341 Commercentre Dr., Ste. 100
Lake Forest, CA 92630
T: 949.380.3970 F: 949.380.3771
email: info@kspeng.com

THE DRAWING AND THE DESIGN SHOWN ARE THE PROPERTY OF KSP CONSULTING ENGINEERS, INC. THE PRODUCTION, COPYING OR OTHER USE OF THIS DRAWING WITHOUT THEIR WRITTEN CONSENT IS PROHIBITED AND ANY INFRINGEMENT WILL BE SUBJECT TO LEGAL ACTION.

PALM SPRINGS ANIMAL CARE FACILITY

4575 E. MESQUITE AVE.
PALM SPRINGS, CA 92262

Issue

Rev	Date	Description
	08/19/09	DD SET
	10/01/09	50% CD
	10/22/09	PROGRESS SET
	11/23/09	BUILDING PERMIT SET
1	01/04/10	BLDG. PERMIT RESUBMITTAL
	01/18/10	BID SET

Drawn By	DC, EA
Checked By	JH
Job No.	28574
Issue Date	12/29/09
Scale	AS NOTED

Drawing Title

CEILING FRAMING PLAN

NOT FOR CONSTRUCTION

S3

Sheet

This drawing and the design shown are the property of KSP Consulting Engineers, Inc. The production, copying or other use of this drawing without their written consent is prohibited and any infringement will be subject to legal action.

January 18,2010 – 9:48 am : User: dc : K:\Swatt-Meiers\Animal Shelter – Palm Springs\28574_S3.dwg