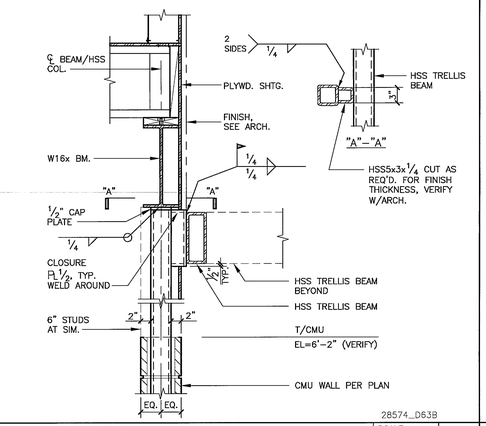

SECTION — SCALE 1"=1'-0" — 20

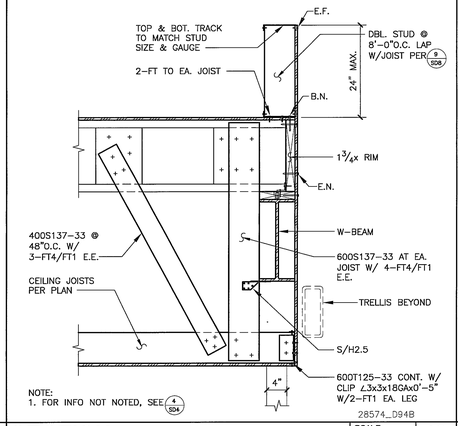

SECTION — SCALE 1"=1'-0" — 16

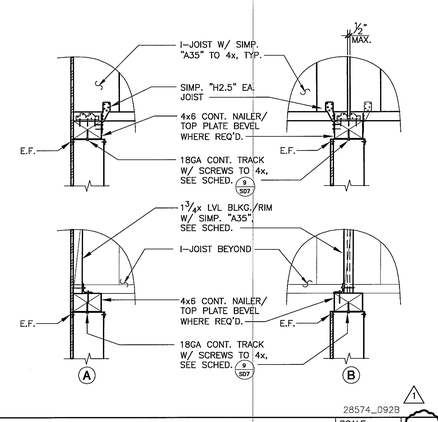

SHEAR TRANSFER DETAIL — SCALE 1"=1'-0" — 12

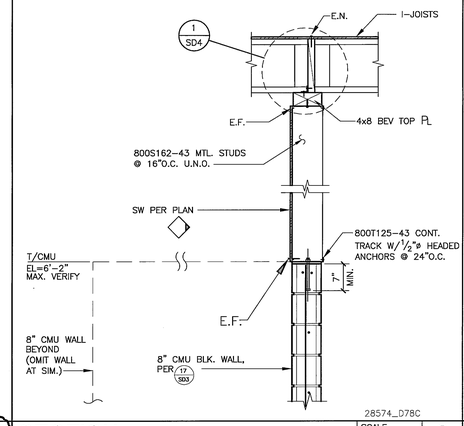

SECTION — SCALE 3/4"=1'-0" — 8

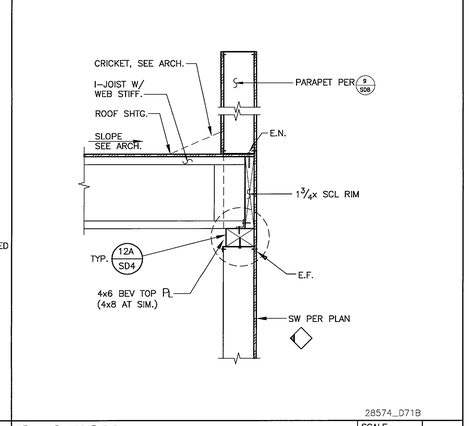

SECTION — SCALE 1"=1'-0" — 4

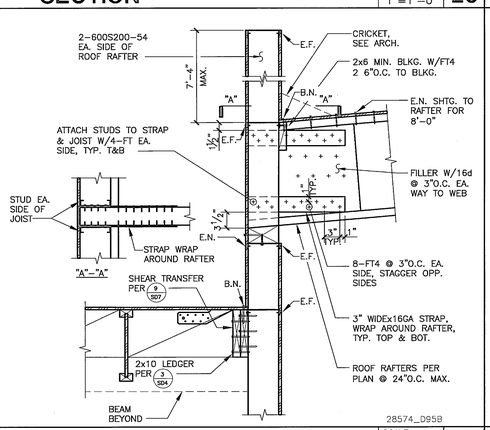

SECTION — SCALE 1"=1'-0" — 19

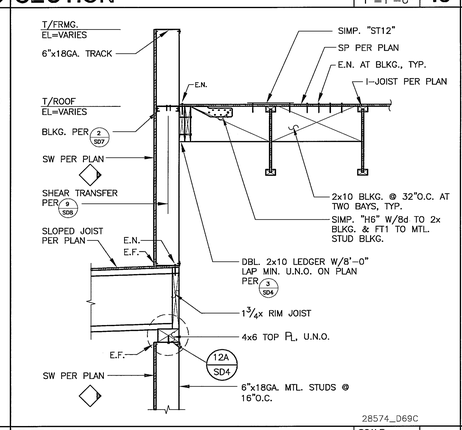

SECTION — SCALE 3/4"=1'-0" — 15

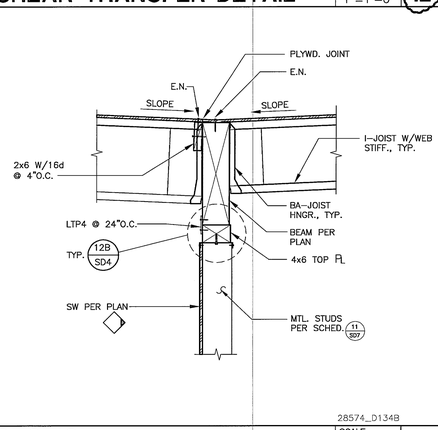

SECTION — SCALE 1"=1'-0" — 11

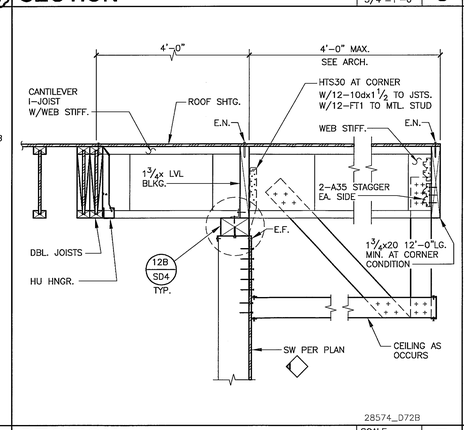

SECTION — SCALE 1"=1'-0" — 7

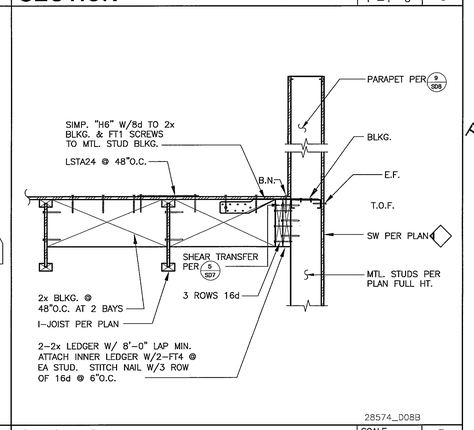

SECTION — SCALE 1"=1'-0" — 3

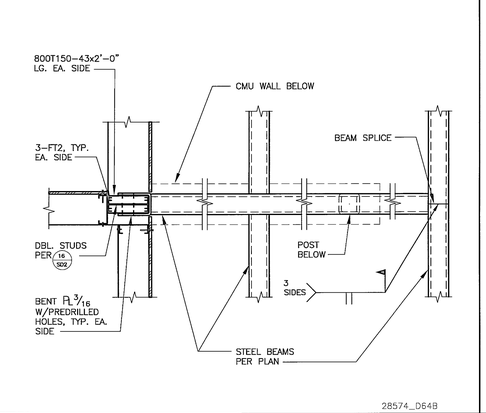

SECTION — SCALE 1"=1'-0" — 18

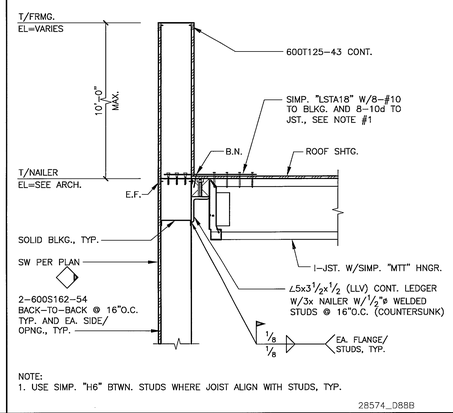

SECTION — SCALE 1"=1'-0" — 14

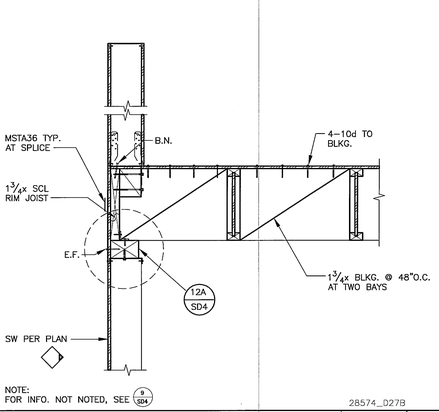

SECTION — SCALE 1"=1'-0" — 10

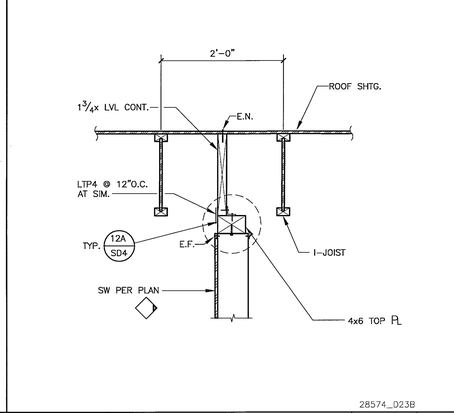

SECTION — SCALE 1"=1'-0" — 6

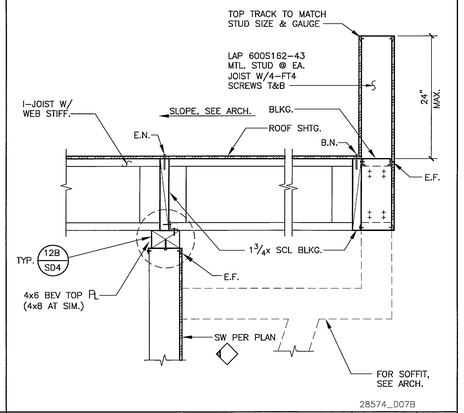

SECTION — SCALE 1"=1'-0" — 2

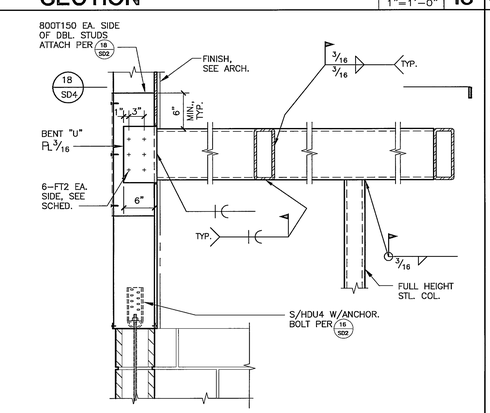

SECTION — SCALE 1"=1'-0" — 17

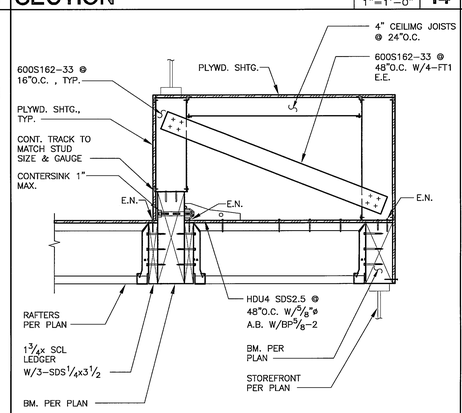

SECTION — SCALE 1"=1'-0" — 13

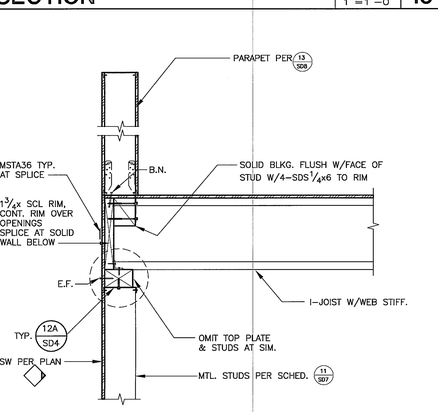

SECTION — SCALE 1"=1'-0" — 9

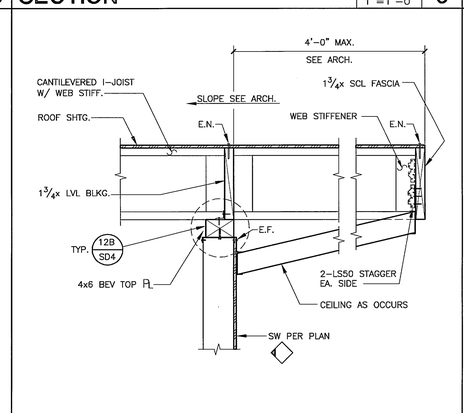

SECTION — SCALE 1"=1'-0" — 5

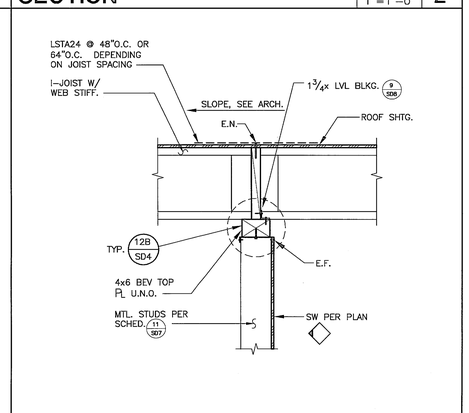

SECTION — SCALE 1"=1'-0" — 1

SWATT | MIERS ARCHITECTS

5845 Doyle Street, Suite 104
Emeryville, CA 94608
Tel: 510 985 9779
Fax: 510 985 0116

www.swattmiers.com

JAN 19 2010

PREVAILING WAGE JOB

BID SET

KSP

KSP CONSULTING ENGINEERS, INC.

25341 Commercentre Dr., Ste. 100
Lake Forest, CA 92630
T: 949.380.3970 F: 949.380.3771
email: info@kspeng.com

THIS DRAWING AND THE DESIGN SHOWN ARE THE PROPERTY OF KSP CONSULTING ENGINEERS, INC. THE PRODUCTION, COPYING OR OTHER USE OF THIS DRAWING WITHOUT THEIR WRITTEN CONSENT IS PROHIBITED AND ANY INFRINGEMENT WILL BE SUBJECT TO LEGAL ACTION.

PALM SPRINGS ANIMAL CARE FACILITY

4575 E. MESQUITE AVE.
PALM SPRINGS, CA 92262

Issue

Rev	Date	Description
	08/19/09	DD SET
	10/01/09	50% CD
	10/22/09	PROGRESS SET
	11/23/09	BUILDING PERMIT SET
1	01/04/10	BLDG. PERMIT RESUBMITTAL
	01/18/10	BID SET

Drawn By	DC, EA
Checked By	JH
Job No.	28574
Issue Date	12/29/09
Scale	AS NOTED

Drawing Title

SECTIONS & DETAILS

NOT FOR CONSTRUCTION

SD4

Sheet

This drawing and the design shown are the property of KSP Consulting Engineers, Inc. The production, copying or other use of this drawing without their written consent is prohibited and any infringement will be subject to legal action.

January 13,2010 – 5:56 pm : User: dc : K:\Swatt-Meiers\Animal Shelter – Palm Springs\28574_SD4.dwg