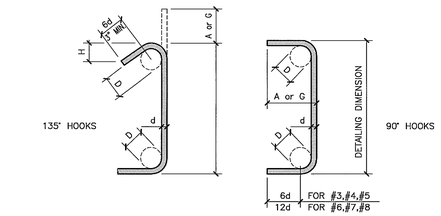

STIRRUP AND TIE HOOKS, ALL GRADES				
BAR SIZE, d	FINISHED BEND DIAM., D	135° HOOKS		90° HOOKS
		A or G	H, APPROX.	A or G
#3	1 1/2"	4 1/4"	3"	4"
#4	2"	4 1/2"	3"	4 1/2"
#5	2 1/2"	5 1/2"	3 3/4"	6"
#6	4 1/2"	8"	4 1/2"	1'-0"
#7	5 1/4"	9"	5 1/4"	1'-2"
#8	6"	10 1/2"	6"	1'-4"

'd'= NOMINAL DIAMETR OF BAR.

HD_003C

SEISMIC STIRRUP/TIE HOOKS — SCALE N.T.S. — 20

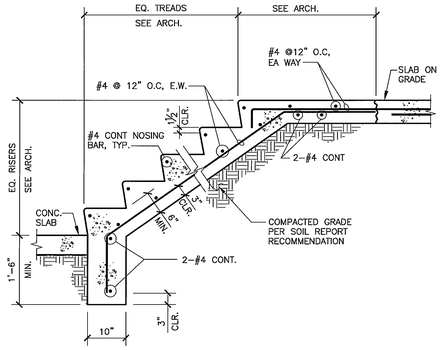

28574_D100C

STAIR SECTION — SCALE 3/4"=1'-0" — 16

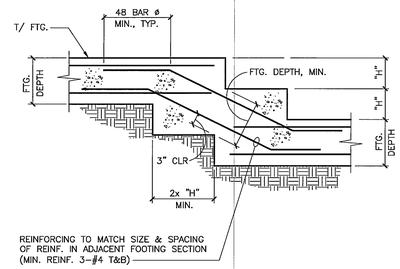

NOTE:
FOR CMU WALLS "H" = 1'-4" MAX.

G33

STEPPED FOOTING — SCALE 3/4"=1'-0" — 12

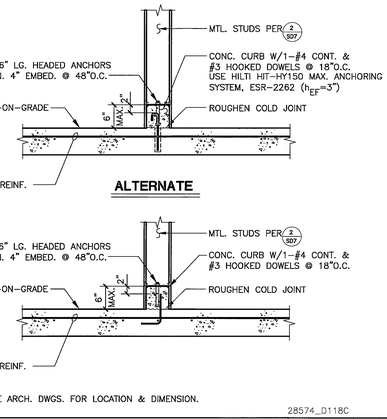

NOTE:
1. SEE ARCH. DWGS. FOR LOCATION & DIMENSION.

28574_D118C

TYP. CONC. CURB DETAIL — SCALE 3/4"=1'-0" — 8

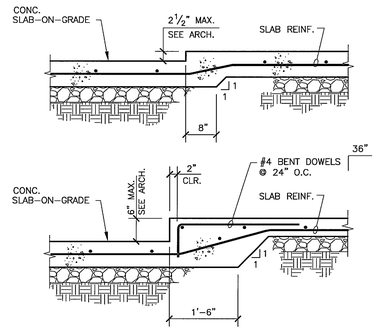

DEPRESSED SLAB — SCALE 3/4"=1'-0" — 4

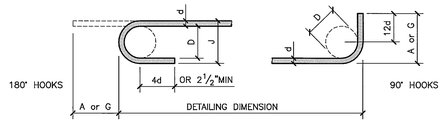

END HOOKS, ALL GRADES				
BAR SIZE, d	FINESHED BEND DIAM., D	180° HOOKS		90° HOOKS
		A or G	J	A or G
#3	2 1/4"	5"	3"	6"
#4	3"	6"	4"	8"
#5	3 3/4"	7"	5"	10"
#6	4 1/2"	8"	6"	1'-0"
#7	5 1/4"	10"	7"	1'-2"
#8	6"	11"	8"	1'-4"
#9	9 1/2"	1'-3"	11 3/4"	1'-7"
#10	10 3/4"	1'-5"	1'-1 1/4"	1'-10"
#11	12"	1'-7"	1'-2 3/4"	2'-0"
#14	18 1/4"	2'-3"	1'-9 3/4"	2'-7"
#18	24"	3'-0"	2'-4 1/2"	3'-5"

'd'= NOMINAL DIAMETR OF BAR.

HD_002C

STANDARD HOOKS — SCALE N.T.S. — 19

SCHEDULE										
"H"	"L"	"X"	"Y"	"a" BAR	"LAP"	"D"	"K"	"W"	"b"	"c"
6'-0"	4'-6"	3'-3"	8"	#5 @ 12"O.C.	36"	16"	6"	8"	#4 @ 24"O.C.	1-#4
4'-0"	3'-3"	2'-0"	8"	#4 @ 18"O.C.	24"	14"	–	–	–	–
3'-0"	2'-9"	1'-3"	8"	#4 @ 18"O.C.	24"	12"	–	–	–	–

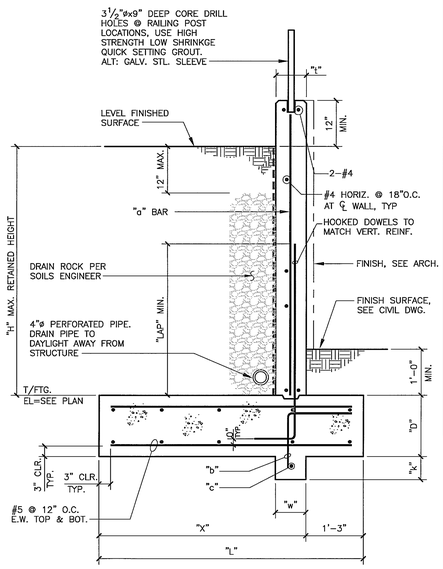

NOTE:
1. VERIFY W/GEOTECHNICAL REPORT AND CIVIL DRAWINGS FOR BACKFILL AND DRAINAGE REQUIREMENTS.

28574_D113C

RETAINING WALL SECTION — SCALE 3/4"=1'-0" — 14

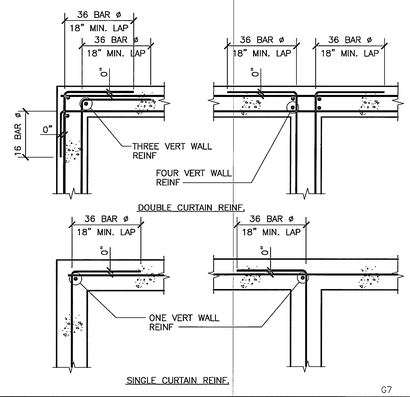

G7

CONC. FTG./WALL REINF. — SCALE 3/4"=1'-0" — 11

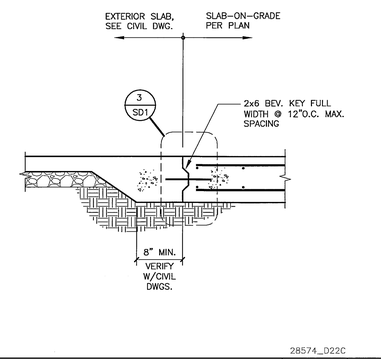

28574_D22C

CONC. SLAB TRANSITION — SCALE 3/4"=1'-0" — 7

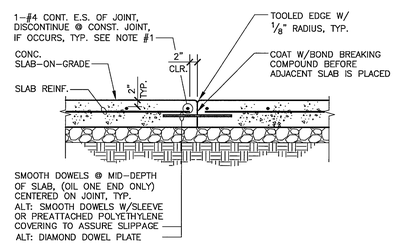

SLAB THICKNESS, IN.	SMOOTH DOWEL			DIAMOND DOWEL PLATE	
	DIAMETER DOWEL, IN.	TOTAL LENGTH, IN.	SPACING O.C. IN.	THK.xSQ. LENGTH IN.	SPACING O.C. IN.
~~4~~	~~1/2~~	~~14~~	~~12~~	~~1/4x4 1/2~~	~~18~~
5	5/8	16	12	1/4x4 1/2	18
~~6~~	~~3/4~~	~~16~~	~~12~~	~~1/4x4 1/2~~	~~18~~

NOTE:
1. ADD'L REINF. NOT REQ'D IF TYPICAL SLAB REINF. IS LOCATED @ EDGE OF JOINT.

28574_D39C

SLAB CONSTRUCTION JOINT — SCALE 3/4"=1'-0" — 3

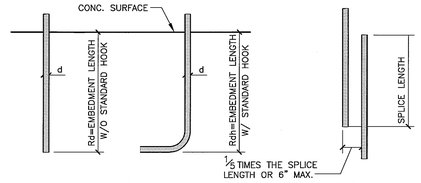

BAR SCHEDULE (GRADE 60) fc'=3000 PSI

BAR SIZE, d	EMBEDMENT (MIN)		SPLICE LENGTH
	WITHOUT HOOK	WITH HOOK	
#3	1'-9"	9"	2'-3"
#4	2'-3"	11"	2'-11"
#5	2'-9"	1'-2"	3'-6"
#6	3'-2"	1'-5"	4'-0"
#7	4'-5"	1'-8"	5'-9"
#8	4'-11"	1'-10"	6'-5"
#9	5'-4"	2'-1"	6'-11"
#10	5'-10"	2'-4"	7'-7"

BAR SCHEDULE (GRADE 60) fc'=4000 PSI

BAR SIZE, d	EMBEDMENT (MIN)		SPLICE LENGTH
	WITHOUT HOOK	WITH HOOK	
#3	1'-9"	8"	2'-3"
#4	2'-3"	10"	2'-6"
#5	2'-0"	1'-0"	2'-11"
#6	2'-9"	1'-3"	3'-6"
#7	3'-6"	1'-5"	4'-6"
#8	4'-0"	1'-7"	5'-3"
#9	4'-6"	1'-10"	6'-0"
#10	5'-0"	2'-1"	6'-6"

NOTE: BASIC DEVELOPMENT LENGTH & SPLICE COMPUTED FOR UNCOATED DEFORMED BARS.

HD_001C

BAR EMBED./SPLICE SCHED. — SCALE N.T.S. — 18

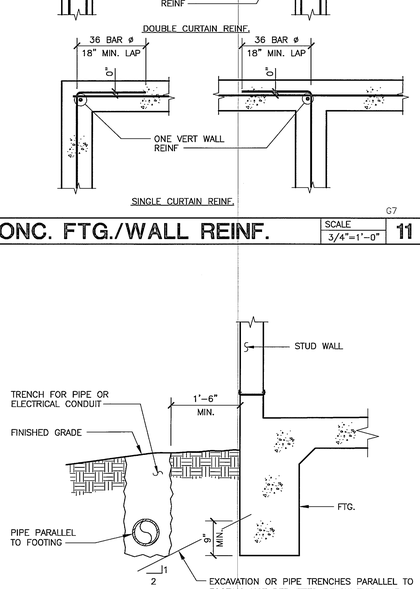

28574_D15C

PIPES PARALLEL TO FTG. — SCALE 3/4"=1'-0" — 10

NOTES:
1. NO PIPES TO PENETRATE THRU FOOTING.
2. WHERE PIPES DO OCCUR AT FOOTING ELEVATION, STEP FOOTING DOWN

28574_D14C

PIPES PERP. TO FTG. — SCALE 3/4"=1'-0" — 6

NOTES:
1. SLAB-CUTTING PERMITTED THE SAME DAY OF THE POUR
2. FOR JOINT LOCATION, SEE ARCH. PLANS.
3. SPACE JOINTS @ 12'-0" O.C. MAX. TYP. @ FOR INTERIOR & EXTERIOR SLABS.
4. FOR DEPRESSION MORE THAN 3/4" SEE 4/SD1

28574_D122C

SLAB CONTROL JOINT — SCALE 3/4"=1'-0" — 2

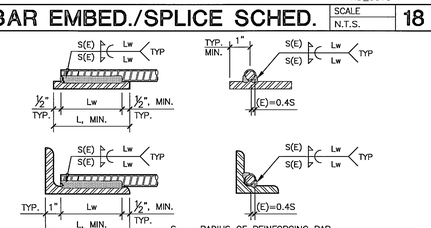

S – RADIUS OF REINFORCING BAR
(E)* – EFFECTIVE WELD (THROAT) SIZE

BAR SIZE	WELD			PLATE SIZE L, MIN.	ANGLE LEG, L, MIN.	CAPACITY (4), K
	S	E *	Lw			
#5	5/16"	3/16"	3 1/2"	4 1/2"	5"	16.7
#6	3/8"	3/16"	4 1/2"	5 1/2"	6"	23.8
#7	7/16"	3/16"	5 1/2"	6 1/2"	7"	32.4
#8	1/2"	1/4"	6"	7"	–	42.4
#9	9/16"	1/4"	7"	8"	–	54.0

* FILL FLUSH WITH OUTSIDE DIAMETER OF DOWELS/REBAR TYP.

NOTES:
1. ALL REINFORCING WELDING SHALL BE IN ACCORDANCE WITH "STRUCTURAL WELDING CODE–REINFORCING STEEL" (ANSI/AWS D1.4).
2. WELDED REINFORCING SHALL CONFORM TO ASTM A706 GRADE 60.
3. ALL WELDING SHALL BE DONE WITH LOW HYDROGEN WELDING ELECTRODES E70XX MIN.
4. LATERAL CAPACITY IS AT STRENGTH LEVEL FOR SINGLE REBAR.

27595_D47G

TYPICAL REBAR WELDING — SCALE 3"=1'-0" — 17

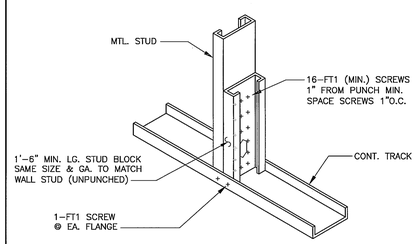

MSD_D19B

REINF. AT STUD END — SCALE 1"=1'-0" — 13

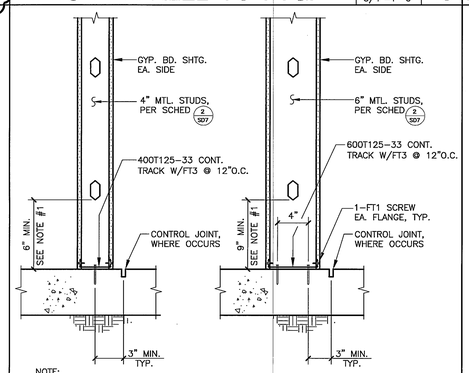

NOTE:
1. SEE DET. 13/S01 FOR LESS THAN 6" OR 9" RESPECTIVELY.
2. FOR PARTITION PLACED ON TOP OF CURB, SEE 6/S01

28574_D121A

MTL. STUD WALL TO SLAB — SCALE 1 1/2"=1'-0" — 9

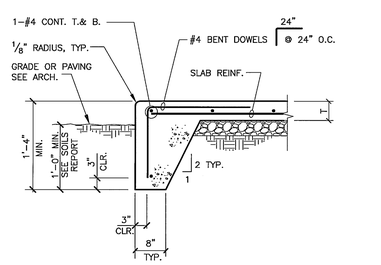

28574_D14C

TYPICAL EDGE OF SLAB — SCALE 3/4"=1'-0" — 5

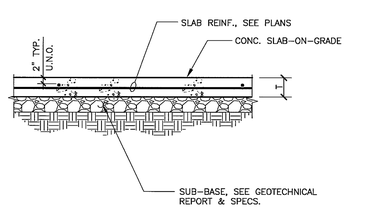

NOTE:
1. FOR SLAB THICKNESS "T", SEE FOUNDATION PLAN

28574_D13C

TYPICAL SLAB ON GRADE — SCALE 3/4"=1'-0" — 1

SWATT | MIERS ARCHITECTS
5845 Doyle Street, Suite 104
Emeryville, CA 94608
Tel: 510 985 9779
Fax: 510 985 0116
www.swattmiers.com

JAN 19 2010

PREVAILING WAGE JOB

BID SET

KSP
KSP CONSULTING ENGINEERS, INC.
25341 Commercentre Dr., Ste. 100
Lake Forest, CA 92630
T: 949.380.2970 F: 949.380.3771
email: info@kspeng.com

THE DRAWING AND THE DESIGN SHOWN ARE THE PROPERTY OF KSP CONSULTING ENGINEERS, INC. THE PRODUCTION, COPYING OR OTHER USE OF THIS DRAWING WITHOUT THEIR WRITTEN CONSENT IS PROHIBITED AND ANY INFRINGEMENT WILL BE SUBJECT TO LEGAL ACTION.

PALM SPRINGS ANIMAL CARE FACILITY

4575 E. MESQUITE AVE.
PALM SPRINGS, CA 92262

Issue

Rev	Date	Description
	08/19/09	DD SET
	10/01/09	50% CD
	10/22/09	PROGRESS SET
	11/23/09	BUILDING PERMIT SET
1	01/04/10	BLDG. PERMIT RESUBMITTAL
	01/18/10	BID SET

Drawn By	DC, EA
Checked By	JH
Job No.	28574
Issue Date	12/29/09
Scale	AS NOTED

Drawing Title
SECTIONS & DETAILS

NOT FOR CONSTRUCTION

SD1
Sheet

This drawing and the design shown are the property of KSP Consulting Engineers, Inc. The production, copying or other use of this drawing without their written consent is prohibited and any infringement will be subject to legal action.

January 13,2010 – 5:56 pm : User: dc : K:\Swatt-Meiers\Animal Shelter – Palm Springs\28574_SD1.dwg