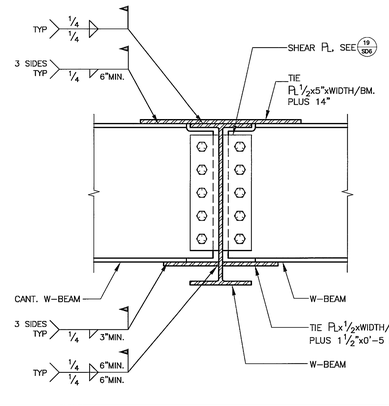

CANT. W-BEAM TO W-BEAM

SCALE 1 1/2"=1'-0" | 20

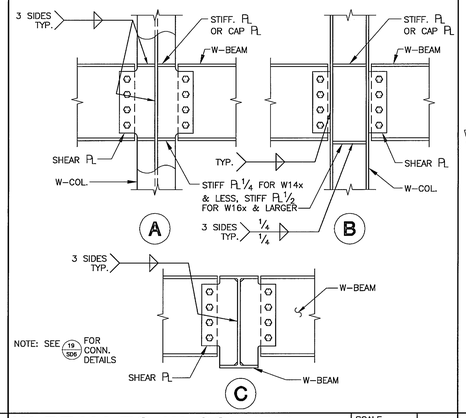

W-BEAM TO W-COL./BM.

SCALE 3/4"=1'-0" | 16

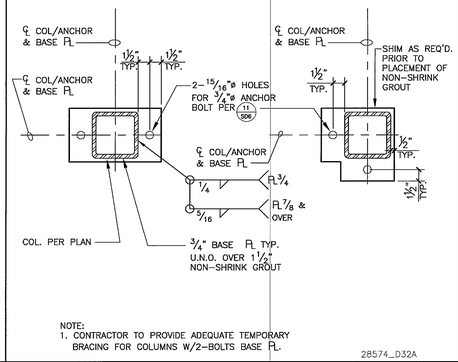

NOTE:
1. CONTRACTOR TO PROVIDE ADEQUATE TEMPORARY BRACING FOR COLUMNS W/2-BOLTS BASE PL.

28574_D32A

SECTION

SCALE 1 1/2"=1'-0" | 12

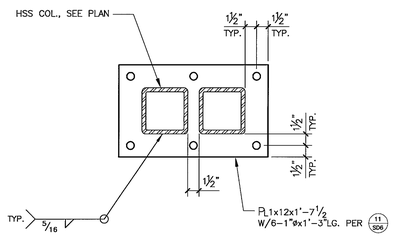

28574_D127A

SECTION

SCALE 1 1/2"=1'-0" | 8

NOTES:
1. THE REDUCED BEAM SECTION SHALL BE MADE USING THERMAL CUTTING TO PRODUCE A SMOOTH CURVE. THE MAXIMUM SURFACE ROUGHNESS OF THE THERMALLY CUT SURFACE SHALL BE 500 MICROINCHES (13 MICRONS) IN ACCORDANCE WITH ANSI B46.1, AS MEASURED USING AWS C4.1-77 SAMPLE 4 OR SIMILAR VISUAL COMPARATOR. ALL TRANSITIONS BETWEEN THE REDUCED BEAM SECTION AND THE UNMODIFIED BEAM FLANGES SHALL BE ROUNDED IN THE DIRECTION OF THE FLANGE LENGTH TO MINIMIZE NOTCH EFFECTS DUE TO ABRUPT TRANSITIONS. CORNERS BETWEEN THE REDUCED SECTION SURFACE AND THE TOP AND BOTTOM OF THE FLANGES SHALL BE GROUND TO REMOVE SHARP EDGES, BUT A MINIMUM CHAMFER OR RADIUS IS NOT REQUIRED.
2. THERMAL CUTTING TOLERANCES SHALL BE PLUS OR MINUS 1/4 IN. (6mm) FROM THE THEORETICAL CUT LINE. THE BEAM EFFECTIVE FLANGE WIDTH AT ANY SECTION SHALL HAVE A TOLERANCE OF PLUS OR MINUS 3/8 IN. (10mm).
3. GOUGES AND NOTCHES THAT OCCUR IN THE THERMALLY CUT RBS SURFACE MAY BE REPAIRED BY GRINDING IF NOT MORE THAN 1/4 IN. (6mm) DEEP. THE GOUGED OR NOTCHED AREA SHALL BE FAIRED BY GRINDING SO THAT A SMOOTH TRANSITION EXISTS, AND THE TOTAL LENGTH OF THE AREA GROUND FOR THE TRANSITION SHALL BE NO LESS THAN FIVE TIMES THE DEPTH OF THE REMOVED GOUGE ON EACH SIDE OF THE GOUGE. IF A SHARP NOTCH EXISTS, THE AREA SHALL BE INSPECTED BY MT AFTER GRINDING TO ENSURE THAT THE ENTIRE DEPTH OF NOTCH HAS BEEN REMOVED. GRINDING THAT INCREASES THE DEPTH OF THE RBS CUT MORE THAN 1/4 IN. (6mm) BEYOND THE SPECIFIED DEPTH OF CUT IS NOT PERMITTED.
4. GOUGES AND NOTCHES THAT EXCEED 1/4 IN. (6mm) IN DEPTH, BUT NOT TO EXCEED 1/2 IN. (12mm) IN DEPTH, AND THOSE NOTCHES AND GOUGES WHERE REPAIR BY GRINDING WOULD INCREASE THE EFFECTIVE DEPTH OF THE RBS CUT BEYOND TOLERANCE, MAY BE REPAIRED BY WELDING. THE NOTCH OR GOUGE SHALL BE REMOVED AND GROUND TO PROVIDE A SMOOTH RADIUS OF NOT LESS THAN 1/4 IN. IN PREPERATION FOR WELDING. THE REPAIR AREA SHALL BE PREHEATED TO A TEMPERATURE OF 150°F OR THE VALUE SPECIFIED IN AWS D1.1 TABLE 3.2, WHICHEVER IS GREATER, MEASURED AT THE LOCATION OF THE WELD REPAIR. NOTCHES AND GOUGES EXCEEDING 1/2 IN. (12mm) IN DEPTH SHALL BE REPAIRED ONLY WITH A METHOD APPROVED BY THE ENGINEER OF RECORD.
5. NOTCHES AND GOUGES EXCEEDING 1/2 IN. (12mm) IN DEPTH SHALL BE REPAIRED ONLY WITH A METHOD APPROVED BY THE ENGINEER OF RECORD.

28553_D71C

SPECIAL MOMENT FRAME NOTES

SCALE 3/4"=1'-0" | 4

W-BEAM	CONNECTION NO. OF A325N BOLTS	SHEAR PLATE	WELD SIZE
W10x & SMALLER	2 - 3/4"ø	1/4	3/16
W12x	3 - 3/4"ø	1/4	3/16
W14x & W16x	4 - 3/4"ø	1/4	3/16
W18x	5 - 3/4"ø	3/8	1/4
W21x	6 - 3/4"ø	3/8	1/4
W24x	7 - 3/4"ø	3/8	5/16
W27x	8 - 3/4"ø	7/16	5/16
W30x	9 - 3/4"ø	7/16	5/16
W33x & W36x	10 - 3/4"ø	7/16	5/16

NOTES:

1. CONNNECTION DETAILS WITH RESPECT TO EDGE DISTANCES, BOLT SPACINGS, HOLE SIZES, ETC. SHALL CONFORM TO THE AMERICAN INSTITUTE OF STEEL CONSTRUCTION (AISC) "MANUAL" OF STEEL CONSTRUCTION", LATEST EDITION.
2. WORK THIS SCHEDULE WITH ALL CONNECTION DETAILS, U.N.O.

BEAM TO COL. OR BEAM

SCALE 1 1/2"=1'-0" | 19

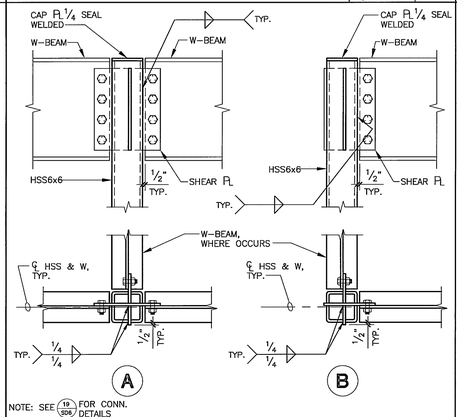

W-BEAM TO HSS COL.

SCALE 1"=1'-0" | 15

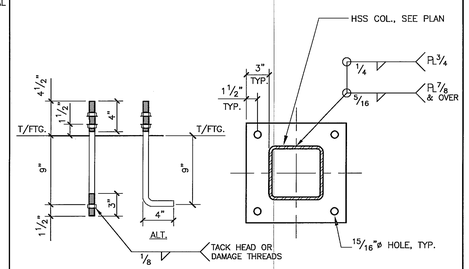

BASE PLATE AND ANCHORS SCHEDULE		
COLUMN SIZE	BASE PLATE	ANCHORS
HSS4x4	3/4x10x0'-10	4-3/4"øx1'-3 LG. ASTM F1554 GRADE 36 ANCHOR RODS W/HEX NUT & WASHER ABOVE & LEVELING NUT BELOW BASE PLATE AND HEAVY HEX NUT @ BOTTOM, TYP.
HSS5x5	3/4x11x0'-11	
HSS6x6	3/4x12x1'-0	

BASE PLATE

SCALE 1 1/2"=1'-0" | 11

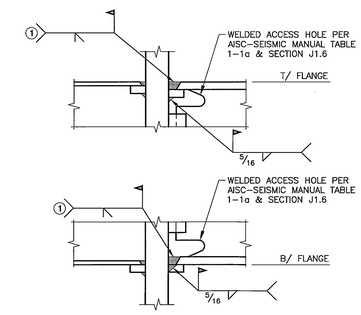

LEGEND

1. CJP GROOVE WELD AT TOP AND BOTTOM FLANGES.
   AT TOP FLANGE: LEAVE BACKING IN PLACE AND ADD 5/16" FILLET UNDER BACKING.
   AT BOTTOM FLANGE: REMOVE WELD BACKING, BACKGOUGE, AND ADD 5/16" MINIMUM FILLET WELD.

28574_D128X

WELDED MOMENT CONNECTION

SCALE N.T.S. | 7

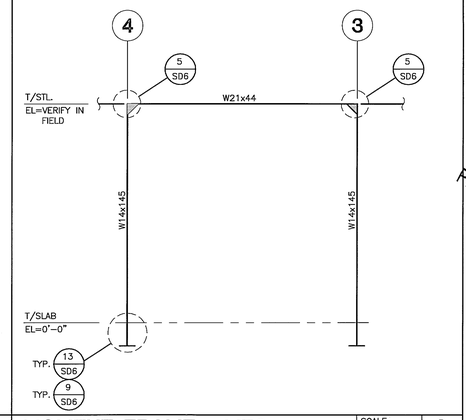

MOMENT FRAME - MF6

SCALE N.T.S. | 3

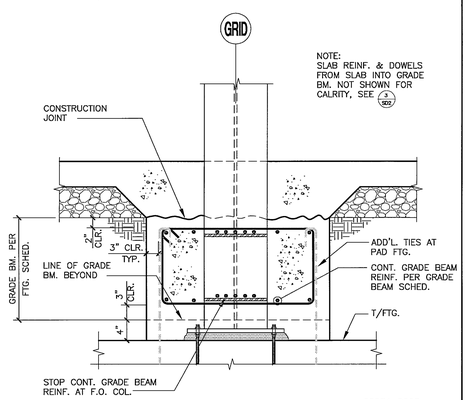

28574_D20B

SECTION AT MOMENT FRAME COLUMN

SCALE 1"=1'-0" | 18

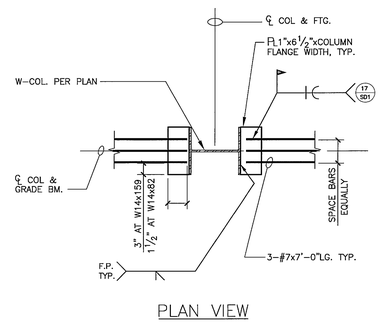

28574_D21C

DETAIL AT TIE PLATE

SCALE 3/4"=1'-0" | 14

BEAM	a	b	c	r	t_c
W18x40	4"	14"	1"	25"	1/2"
W21x44	4 1/2"	15"	1 1/2"	19 1/2"	7/16"
W21x68	5"	15"	1 1/2"	19 1/2"	11/16"

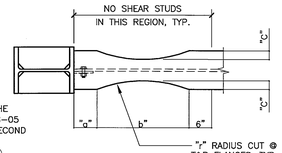

NOTE:
1. RBS SHALL COMPLY WITH THE REQUIREMENTS OF AISC 358-05 SEISMIC DESIGN MANUAL (SECOND PRINTING).
2. FOR WELD ACCESS, SEE 7/SD6

PLAN VIEW

10

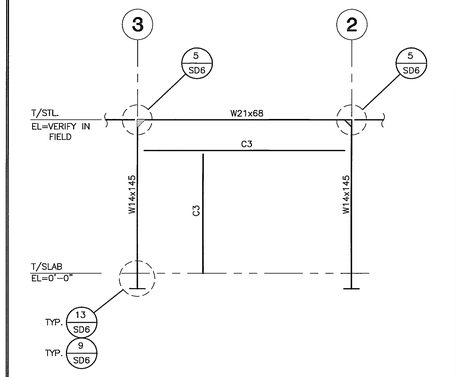

MOMENT FRAME - MF5

SCALE N.T.S. | 2

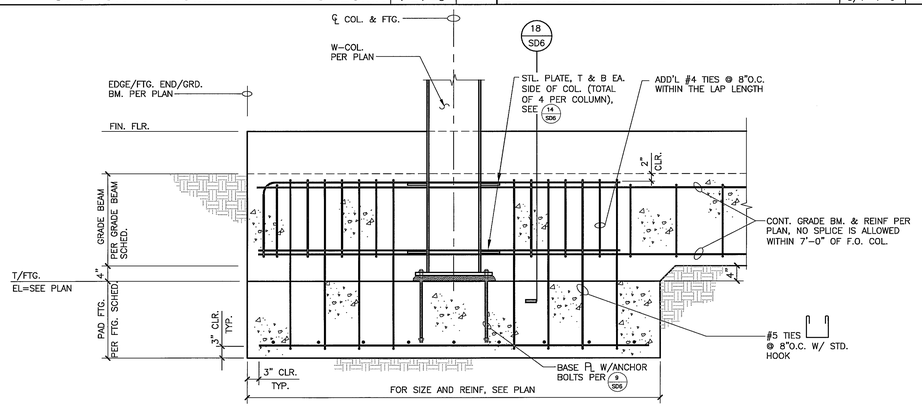

28574_D19C

SECTION AT MOMENT FRAME COLUMN

SCALE 3/4"=1'-0" | 13

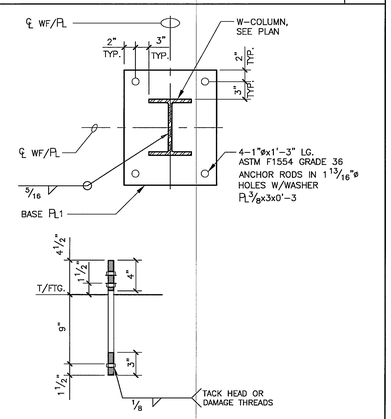

BASE PLATE

SCALE 1"=1'-0" | 9

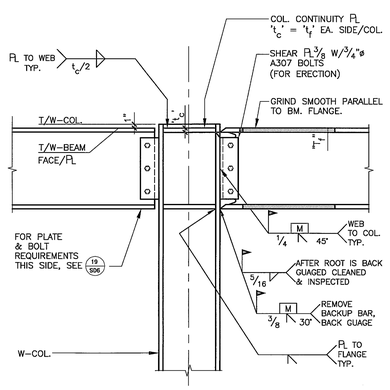

REDUCED BEAM SECTION CONNECTION DETAIL

28574_D82C

MOMENT CONNECTION DETAIL

SCALE 3/4"=1'-0" | 5

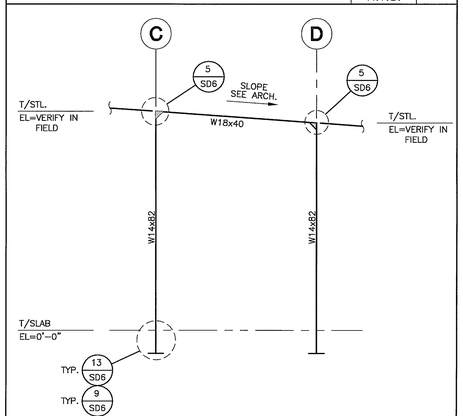

MOMENT FRAME - MF1 TO MF4

SCALE N.T.S. | 1

SWATT | MIERS ARCHITECTS

5845 Doyle Street, Suite 104
Emeryville, CA 94608
Tel: 510 985 9779
Fax: 510 985 0116

www.swattmiers.com

JAN 19 2010

BID SET

PREVAILING WAGE JOB

KSP

KSP CONSULTING ENGINEERS, INC.

25341 Commercentre Dr., Ste. 100
Lake Forest, CA 92630
T: 949.380.3970 F: 949.380.9771
email: info@kspeng.com

THIS DRAWING AND THE DESIGN SHOWN ARE THE PROPERTY OF KSP CONSULTING ENGINEERS, INC. THE REPRODUCTION, COPYING OR USE OF THIS DRAWING WITHOUT THEIR WRITTEN CONSENT IS PROHIBITED AND ANY INFRINGEMENT WILL BE SUBJECT TO LEGAL ACTION.

PALM SPRINGS ANIMAL CARE FACILITY

4575 E. MESQUITE AVE.
PALM SPRINGS, CA 92262

Issue

Rev	Date	Description
	08/19/09	DD SET
	10/01/09	50% CD
	10/22/09	PROGRESS SET
	11/23/09	BUILDING PERMIT SET
1	01/04/10	BLDG. PERMIT RESUBMITTAL
	01/18/10	BID SET

Drawn By	DC, EA
Checked By	JH
Job No.	28574
Issue Date	12/29/09
Scale	AS NOTED

Drawing Title

SECTIONS & DETAILS

NOT FOR CONSTRUCTION

SD6

Sheet

This drawing and the design shown are the property of KSP Consulting Engineers, Inc. The production, copying or other use of this drawing without their written consent is prohibited and any infringement will be subject to legal action.

January 13,2010 - 5:57 pm : User: dc : K:\Swatt-Meiers\Animal Shelter - Palm Springs\28574_SD6.dwg