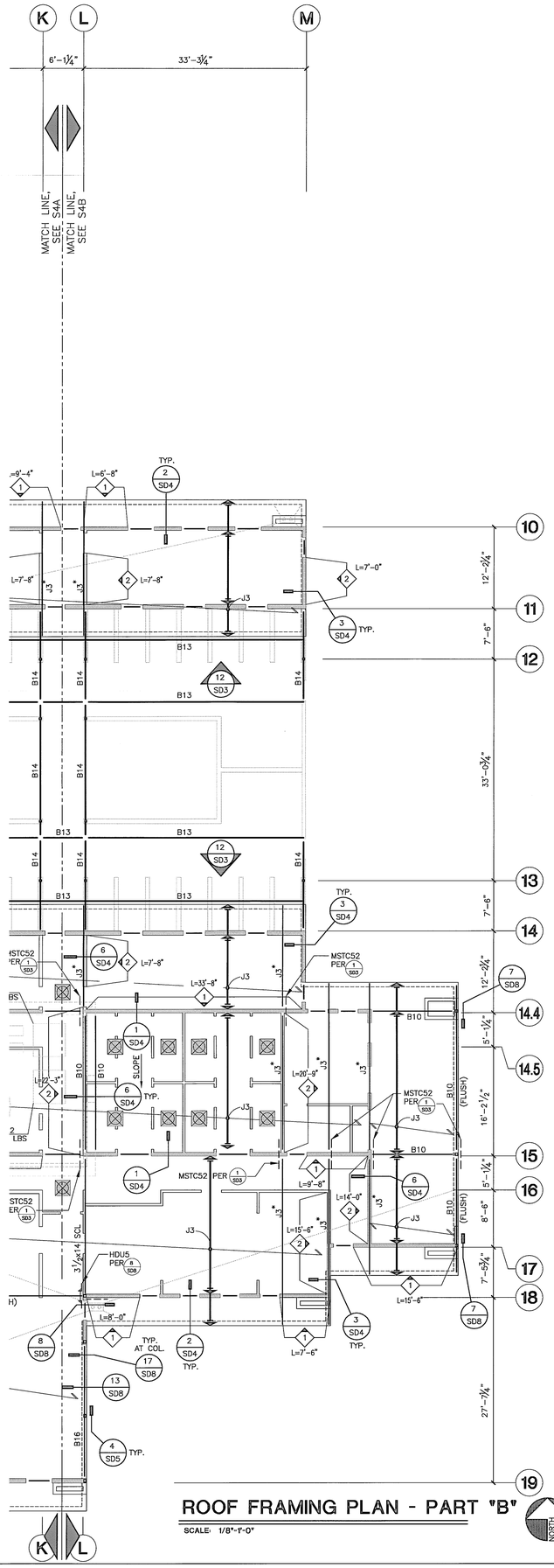

ROOF FRAMING PLAN - PART "B"

SCALE: 1/8"=1'-0"

NORTH

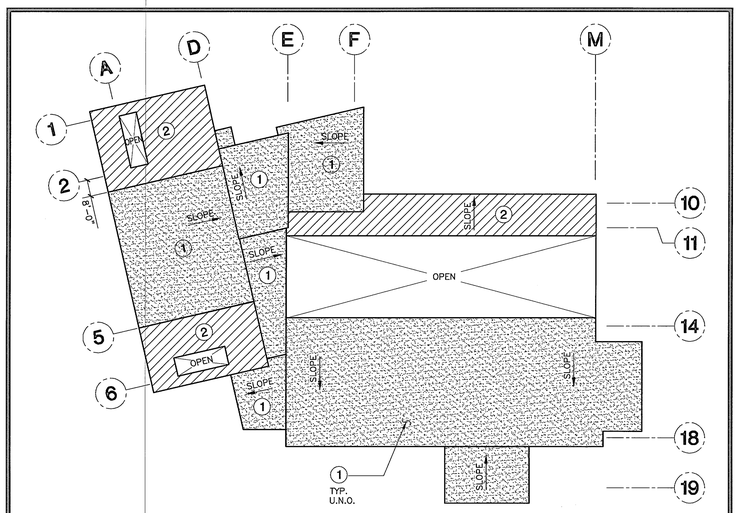

ROOF NAILING DIAGRAM

SCALE: N.T.S.

ROOF DIAPHRAGM SCHEDULE

ZONE	PLYWOOD NOMINAL THICKNESS (1)	LINES OF FASTENERS (@ EA. SIDE OF PLYWOOD JOINT)	BOUNDARY & CONTINUOUS EDGES		AT STAGGERED EDGES	AT INTERMEDIATE SUPPORT	ALLOWABLE SHEAR LB/FT.
			WD. FRAMING OR NAILER	NAIL SPACING (2)	NAIL SPACING (2)	NAIL SPACING (2)	
1	19/32"	1	2x	6"	6"	12"	320
2	19/32"	1	2x	4"	6"	12"	425
~~3~~	~~19/32"~~	~~1~~	~~3x~~	~~2½" (5)~~	~~4"~~	~~12"~~	~~640~~

1. PLYWOOD GRADE SHALL BE STR. I APA RATED SHEATHING, 5 PLIES, SPAN RATING 40/20, EXT. GLUE. ORIENTED STRUCTURAL BOARD (OSB) WITH APPROVED EQUIVALENT PROPERTIES & CAPACITIES IS AN ACCEPTABLE SUBSTITUTE GENERAL CONTRACTOR TO PROVIDE PRODUCT INFORMATION WITH ICC APPROVALS.
2. NAILS SHALL BE 10d GALVANIZED COMMON NAILS OR 0.148"ø GALVANIZED SCREW SHANK (GLUE COATED) WITH BENDING YIELD STRENGTH F_{YB}=90,000 PSI MIN. AND SHALL PENETRATE INTO FRAMING 1½" MINIMUM, WITH MINIMUM EDGE DISTANCE ⅜".
3. PROVIDE 2x BLKG. AT ALL PLYWOOD EDGES. ⅛" GAP SHALL BE PROVIDED BETWEEN PANELS.
4. MINIMUM PLYWOOD PANEL WIDTH AT THE BUILDING PERIMETER SHALL BE 2'-0".
5. SIZES OF FRAMING MEMBERS GIVEN ARE MINIMUM NOMINAL. IF THE PLANS, DETAILS OR NOTES CALL FOR A DIFFERENT SIZE, THE LARGER SIZE SHALL GOVERN.
6. ALLOWABLE SHEAR IS PER CBC 2007 TABLE 2306.3.1

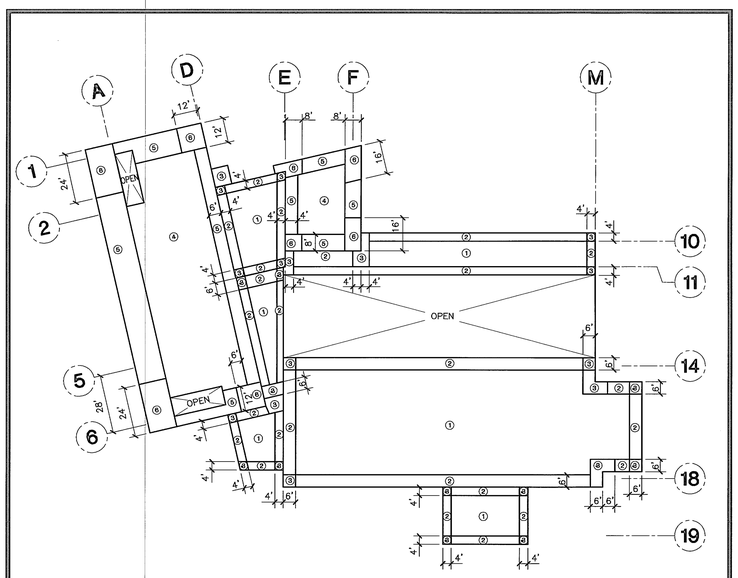

ROOF WIND PRESSURE DIAGRAM

N.T.S.

NOTES TO JOIST MANUFACTURER:

ALL TRUSSES SHALL BE DESIGNED IN CONFORMANCE WITH ASCE/SEI 7-05, SEE WIND UPLIFT DIAGRAM.

ZONE 1 TYPICALLY ALL JOIST SHALL BE DESIGNED FOR UPLIFT PRESSURE OF 18 PSF.

ZONE 2 TYPICALLY ALL JOIST SHALL BE DESIGNED FOR UPLIFT PRESSURE OF 22 PSF.

ZONE 3 TYPICALLY ALL JOIST SHALL BE DESIGNED FOR UPLIFT PRESSURE OF 26 PSF.

ZONE 4 TYPICALLY ALL JOIST SHALL BE DESIGNED FOR UPLIFT PRESSURE OF 28 PSF.

ZONE 5 TYPICALLY ALL JOIST SHALL BE DESIGNED FOR UPLIFT PRESSURE OF 32 PSF.

ZONE 6 TYPICALLY ALL JOIST SHALL BE DESIGNED FOR UPLIFT PRESSURE OF 36 PSF.

ROOF NOTES

1. ROOF SHEATHING, PER ROOF DIAPHRAGM SCHEDULE ON SHEET S4B. WIND PRESSURE PER WIND PRESSURE DIAGRAM ON SHEET S4B.
2. REROOFING OVER EXISTING ROOFING IS NOT PERMITTED WITHOUT APPROVAL OF THE ENGINEER OF RECORD.
3. ALL ROOF MOUNTED EQUIPMENTS TO BE ANCHORED TO ROOF FOR WIND & SEISMIC LOADS. (SEE MECHANICAL DRAWINGS.)
4. FRAMING CONTRACTOR SHALL REVIEW THE FIRE PROTECTION DRAWINGS FOR ALL REQUIREMENTS OF SUPPLYING AND INSTALLING THE SPRINKLER BRACING SYSTEMS. CONTRACTOR SHALL COORDINATE THE INSTALLATION OF THIS BRACING WITH THE FIRE SPRINKLER SUB-CONTRACTOR PRIOR TO INSTALLATION.
5. FIRE SPRINKLER LINE TYPE BRACING. SEE FIRE SPRINKLER DRAWINGS.
6. VERIFY MECHANICAL EQUIPMENTS WEIGHT AND LOCATION AND DIMENSION WITH MECHANICAL ENGINEERING DRAWINGS.
7. APPROVED TRUSS DRAWINGS MUST BE ON JOB SITE FOR INSPECTION PURPOSES.
8. FOR SHEAR WALLS SEE FOUNDATION PLAN & SCHEDULE ON 9/S07. ALL EXTERIOR WALLS TO RECEIVE TYPE 1 SHTG. U.N.O.
9. T.S. EQUALS TOP OF SHEATHING AND T.P. EQUALS TOP OF PARAPET

ROOF BEAM SCHEDULE

SYMBOL	BEAM	REMARKS
B1	HSS12x6x½	
B2	W18x40	
B3	W21x44	
B4	W18x35	
B5	W12x26	
B6	W12x30	
B6*	W12x30	AT LOWER ROOF
B7	HSS12x6x⅝	
B8	W12x30	
B9	W16x40	
B10	5¼x14 SCL	
B11	5¼x18 SCL	FLUSH, SEE DETAILS W/HUCQ612-SDS
B12	5¼x11⅞ SCL	FLUSH, SEE DETAILS
B13	HSS10x4x⅝	
B14	HSS10x4x⅝	
B15	5¼X20 SCL	
B16	5¼X16 SCL	
BR1	HSS5x5x5/16	

ROOF JOIST SCHEDULE

MARK	TRUSS JOIST/RED BUILT	REMARKS
J1	11⅞" TJI/L65 @ 24"O.C.	
J2	14" TJI/L65 @ 32"O.C.	
J3	14" TJI/L65 @ 24"O.C.	
J3*	1¾"x14" SCL (CONT.)	ALIGN W/WALL OR BM., E.N. ROOF SHTG. TO MEMBER
J4	20" TJI/H90 @ 24"O.C.	
J5	16" TJI/L65 @ 24"O.C.	
J6	16" TJI/L90 @ 24"O.C.	

LEGEND

- BEARING WALL BELOW PER 11/S07
- NON-BEARING WALL BELOW
- WALL ABOVE
- L=1'-0" 1 — SHEAR WALL BELOW WITH MINIMUM LENGTH THE LINES REPRESENT THE EXTENT OF THE SHEARWALL. THE SYMBOL IS ON THE SIDE OF THE WALL THAT RECEIVES SHEATHING
- ROOF OPENING
- MF1 — MOMENT FRAME, SEE SHEET SD6
- BEAM TO BEAM MOMENT CONNECTION PER 20/S06 U.N.O.

SWATT | MIERS ARCHITECTS

5845 Doyle Street,
Suite 104
Emeryville, CA 94608
Tel: 510 985 9779
Fax: 510 985 0116

www.swattmiers.com

JAN 19 2010

BID SET

PREVAILING WAGE JOB

KSP
KSP CONSULTING ENGINEERS, INC.
25341 Commercentre Dr., Ste. 100
Lake Forest, CA 92630
T: 949.380.2970 F: 949.380.3771
email: info@kspeng.com

THIS DRAWING AND THE DESIGN SHOWN ARE THE PROPERTY OF KSP CONSULTING ENGINEERS, INC. THE REPRODUCTION, COPYING OR OTHER USE OF THIS DRAWING WITHOUT THEIR WRITTEN CONSENT IS PROHIBITED AND ANY INFRINGEMENT WILL BE SUBJECT TO LEGAL ACTION.

PALM SPRINGS ANIMAL CARE FACILITY

4575 E. MESQUITE AVE.
PALM SPRINGS, CA 92262

Issue

Rev	Date	Description
	08/19/09	DD SET
	10/01/09	50% CD
	10/22/09	PROGRESS SET
	11/23/09	BUILDING PERMIT SET
1	01/04/10	BLDG. PERMIT RESUBMITTAL
	01/18/10	BID SET

Drawn By	DC, EA
Checked By	JH
Job No.	28574
Issue Date	12/29/09
Scale	AS NOTED

Drawing Title

ROOF FRAMING PLAN PART "B"

NOT FOR CONSTRUCTION

S4B

Sheet

This drawing and the design shown are the property of KSP Consulting Engineers, Inc. The production, copying or other use of this drawing without their written consent is prohibited and any infringement will be subject to legal action.

January 13,2010 – 5:55 pm : User: dc : K:\Swatt-Meiers\Animal Shelter – Palm Springs\28574_S4B.dwg