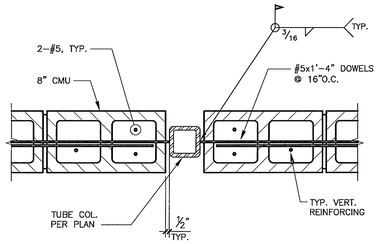

28574_D01A

SECTION | SCALE 1 1/2"=1'-0" | 20

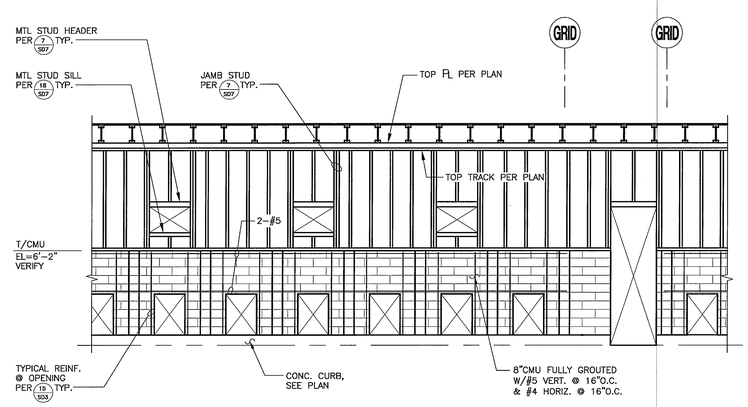

28574_D65E

ELEVATION | SCALE 1/4"=1'-0" | 12

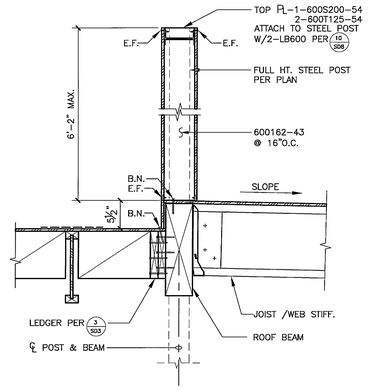

28574_D108B

SECTION | SCALE 1"=1'-0" | 8

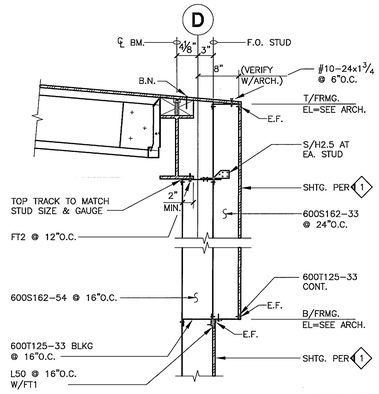

28574_D75B

SECTION | SCALE 1"=1'-0" | 4

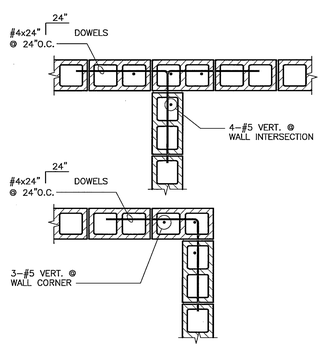

NOTES:
1. INTERLOCK ALL CORNERS AND INTERSECTIONS, NO TOOTHING ALLOWED
2. REINF. NOT SHOWN FOR CLARITY.

MAC052C_1

TYP. CMU WALL REINF. AT CORNER | SCALE 3/4"=1'-0" | 19

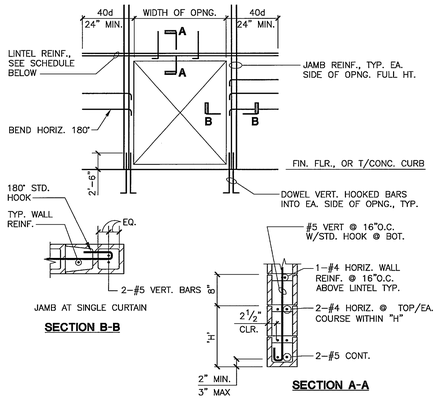

28574_D66A

TYP. CMU WALL OPNG. | SCALE N.T.S. | 15

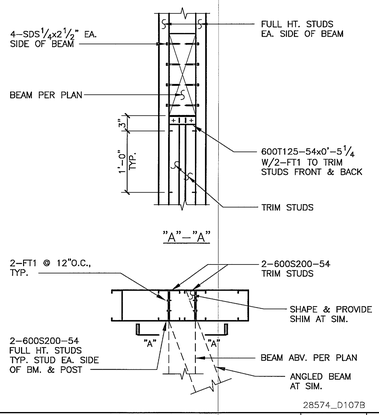

28574_D107B

SECTION | SCALE 1"=1'-0" | 11

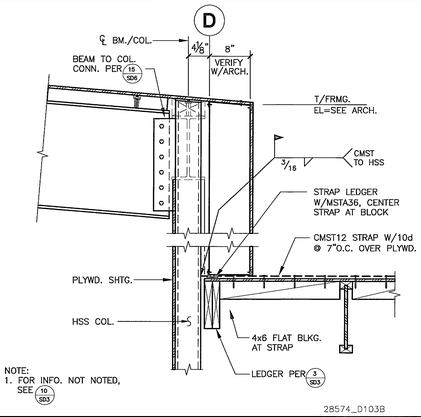

28574_D103B

SECTION | SCALE 1"=1'-0" | 7

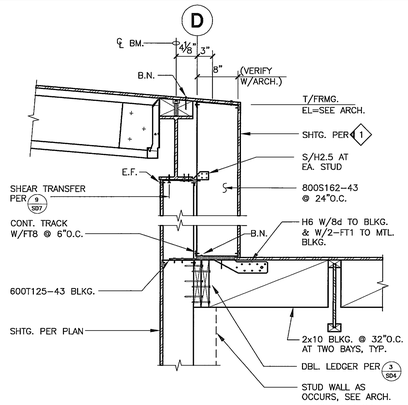

28574_D76B

SECTION | SCALE 1"=1'-0" | 3

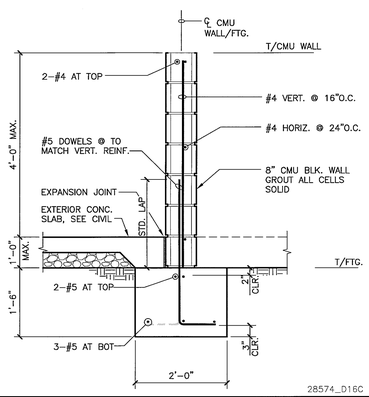

28574_D16C

SECTION AT ADOPTION COURTYARD | SCALE 3/4"=1'-0" | 18

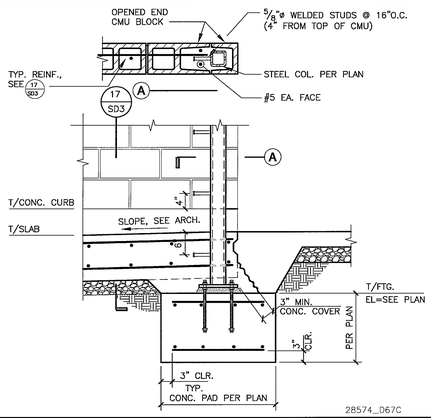

28574_D67C

SECTION | SCALE 3/4"=1'-0" | 14

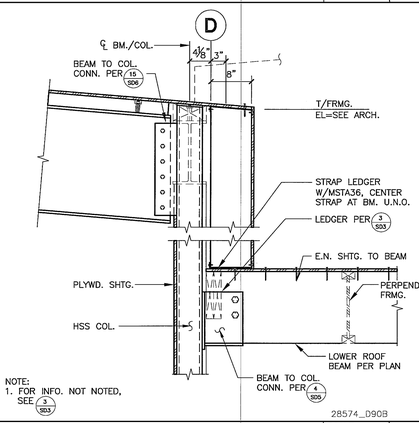

28574_D90B

SECTION | SCALE 1"=1'-0" | 10

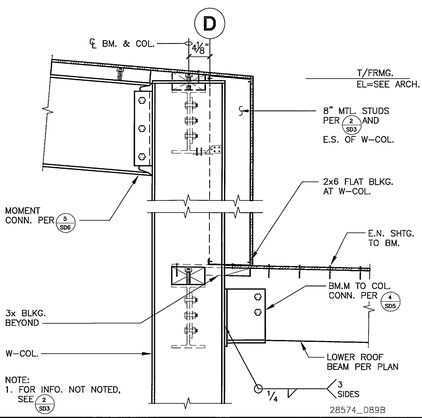

28574_D89B

SECTION | SCALE 1"=1'-0" | 6

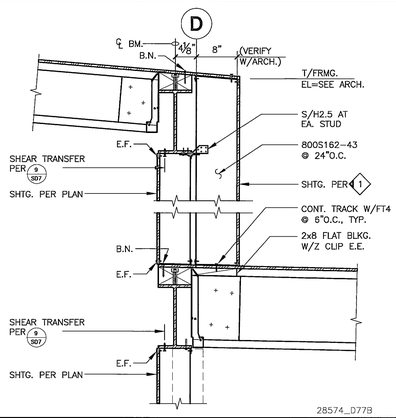

28574_D77B

SECTION | SCALE 1"=1'-0" | 2

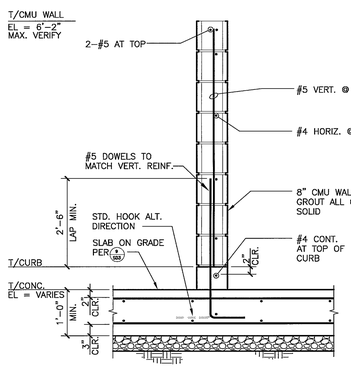

28574_D17C

SECTION | SCALE 3/4"=1'-0" | 17

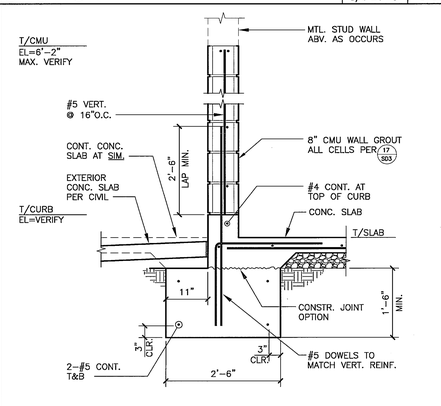

28574_D98C

SECTION | SCALE 3/4"=1'-0" | 13

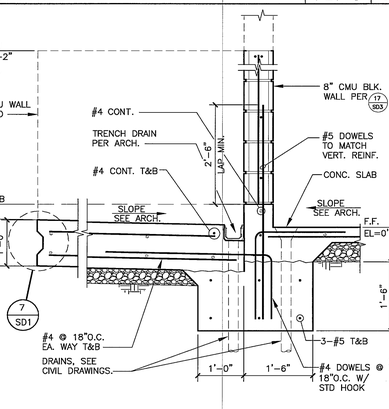

28574_D79C

SECTION | SCALE 3/4"=1'-0" | 9

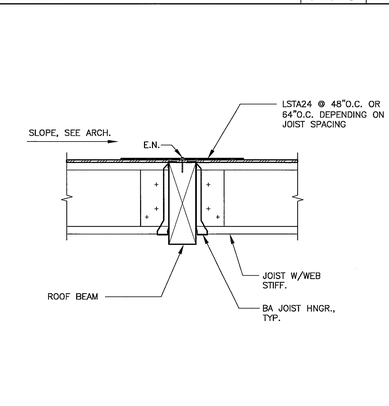

28574_D105B

SECTION | SCALE 1"=1'-0" | 5

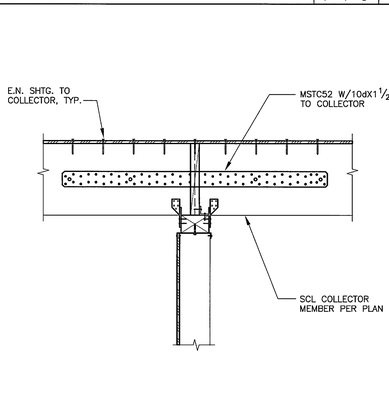

28574_D142B

SECTION | SCALE 1"=1'-0" | 1

SWATT | MIERS ARCHITECTS
5845 Doyle Street, Suite 104
Emeryville, CA 94608
Tel: 510 985 9779
Fax: 510 985 0116
www.swattmiers.com

BID SET

JAN 19 2010

PREVAILING WAGE JOB

THE DRAWING AND THE DESIGN SHOWN ARE THE PROPERTY OF KSP CONSULTING ENGINEERS, INC. THE REPRODUCTION, COPYING OR OTHER USE OF THIS DRAWING WITHOUT THEIR WRITTEN CONSENT IS PROHIBITED AND ANY INFRINGEMENT WILL BE SUBJECT TO LEGAL ACTION.

KSP
KSP CONSULTING ENGINEERS, INC.
25341 Commercentre Dr., Ste. 100
Lake Forest, CA 92630
T: 949.380.2910 F: 949.380.3771
email: info@kspeng.com

PALM SPRINGS ANIMAL CARE FACILITY

4575 E. MESQUITE AVE.
PALM SPRINGS, CA 92262

Issue

Rev	Date	Description
	08/19/09	DD SET
	10/01/09	50% CD
	10/22/09	PROGRESS SET
	11/23/09	BUILDING PERMIT SET
1	01/04/10	BLDG. PERMIT RESUBMITTAL
	01/18/10	BID SET

Drawn By	DC, EA
Checked By	JH
Job No.	28574
Issue Date	12/29/09
Scale	AS NOTED

Drawing Title

SECTIONS & DETAILS

NOT FOR CONSTRUCTION

SD3

Sheet

This drawing and the design shown are the property of KSP Consulting Engineers, Inc. The production, copying or other use of this drawing without their written consent is prohibited and any infringement will be subject to legal action.

January 13,2010 - 5:56 pm ; User: dc ; K:\Swatt-Meires\Animal Shelter - Palm Springs\28574_SD3.dwg