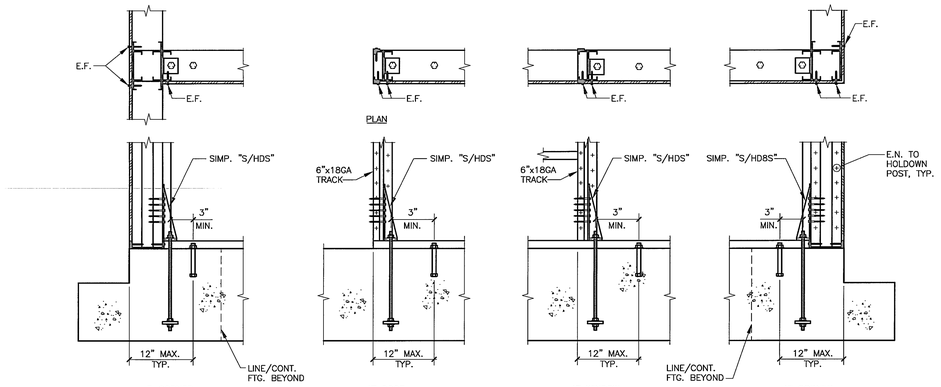

28574_D25B

SINGLE HOLDOWN PLACEMENT AT FOUNDATION

SCALE 1"=1'-0" | 16

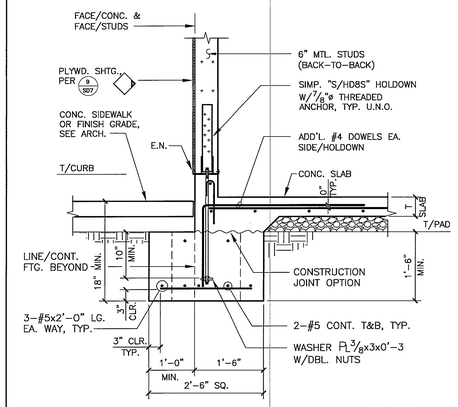

28574_D47C

TYP. EXTERIOR WALL FTG. AT HOLDOWN

SCALE 3/4"=1'-0" | 12

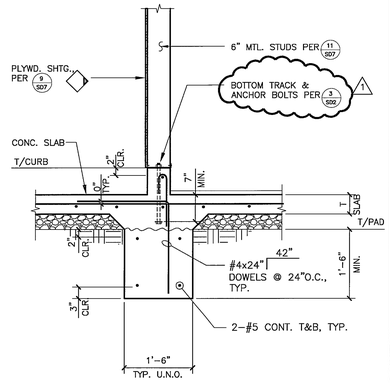

28574_D61C

TYP. INTERIOR WALL FTG. W/CURB

SCALE 3/4"=1'-0" | 8

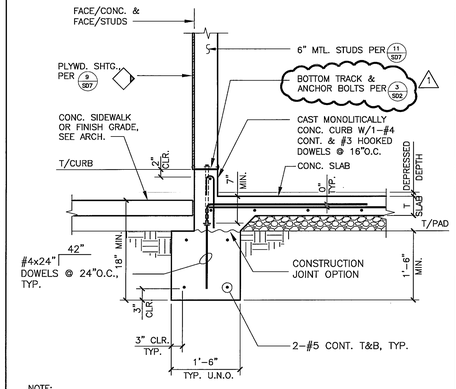

NOTE:
1. TOP OF PAD TO BE ADJUSTED IN ACCORDANCE WITH DEPRESSED DEPTH.

28574_D62C

TYP. EXTERIOR WALL FTG. W/CURB

SCALE 3/4"=1'-0" | 4

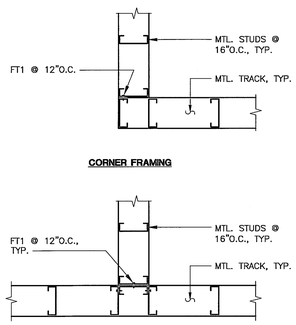

TYP. WALL INTERSECTION

SCALE 1"=1'-0" | 19

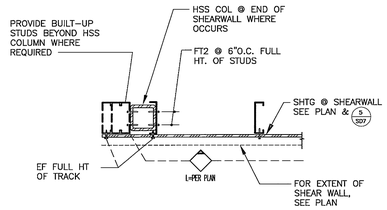

HSS HOLDOWN AT TYP. SHEAR WALL

MS_D20B

SECTION

SCALE 1"=1'-0" | 15

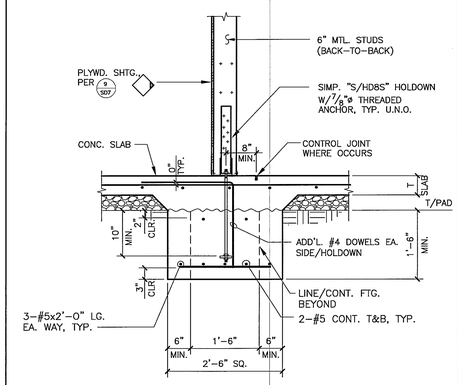

28574_D48C

TYP. INTERIOR WALL FTG. AT HOLDOWN

SCALE 3/4"=1'-0" | 11

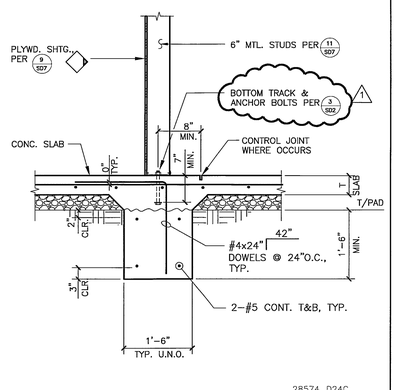

28574_D24C

TYPICAL INTERIOR WALL FTG.

SCALE 3/4"=1'-0" | 7

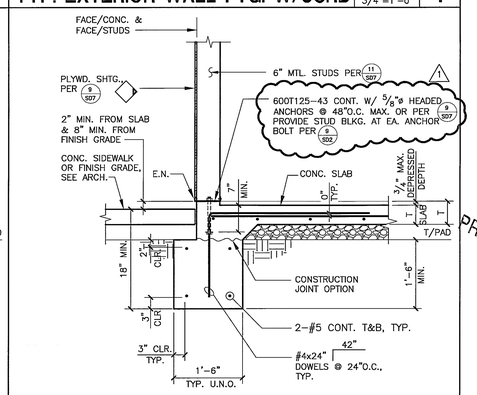

NOTE:
1. TOP OF PAD TO BE ADJUSTED IN ACCORDANCE WITH DEPRESSED DEPTH.

28574_D46C

TYP. EXTERIOR WALL FTG.

SCALE 3/4"=1'-0" | 3

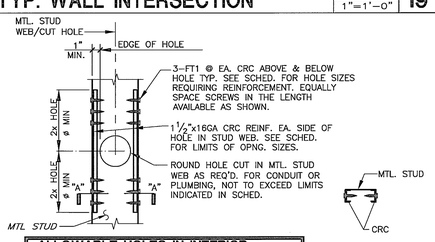

ALLOWABLE HOLES IN INTERIOR METAL STUD WEBS		
STUD SIZE	UNREINFORCED[3]	REINFORCED[4]
3 5/8"	2"ø	2 1/2"ø
4"	2 1/2"ø	2 7/8"ø
6"	3 5/8"ø	4 7/8"ø

NOTES:
1. PIPE, CONDUIT OR OTHER UTILITIES SHALL BE LOCATED IN THE PRE-PUNCHED OPENINGS OF METAL STUD WEBS WHEREVER POSSIBLE.
2. HOLES IN METAL STUDS SHALL BE CUT IN WEB ONLY. FLANGES OR THE STIFFENING PROJECTIONS OF FLANGES SHALL NOT BE CUT.
3. ROUND HOLES UP TO THIS SIZE MAY BE CUT IN METAL STUD WEBS WITHOUT ADDITIONAL REINFORCEMENT.
4. MAX. ALLOWABLE HOLE SIZE WHEN ∠ REINFORCEMENT IS USED.
5. CRC=COLD ROLLED CHANNEL.

MS_D29A

DETAIL

SCALE 1 1/2"=1'-0" | 18

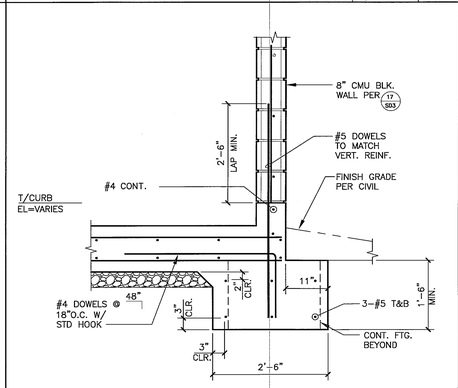

28574_D130C

SECTION

SCALE 3/4"=1'-0" | 10

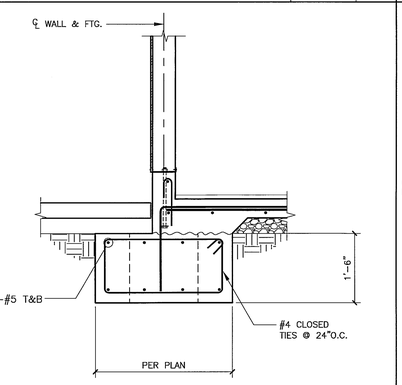

NOTE:
1. TOP OF PAD TO BE ADJUSTED IN ACCORDANCE WITH DEPRESSED DEPTH.

28574_D80C

TYP. EXTERIOR WALL FTG. W/CURB

SCALE 3/4"=1'-0" | 6

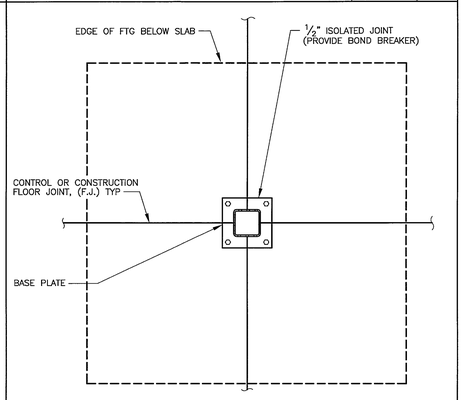

TYP. EXTERIOR FOOTING

SCALE 3/4"=1'-0" | 1

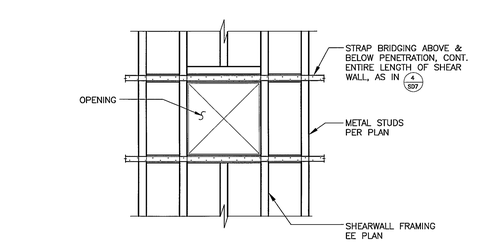

MS_D22B

PENETRATION @ SHEAR WALL

SCALE 1"=1'-0" | 17

13

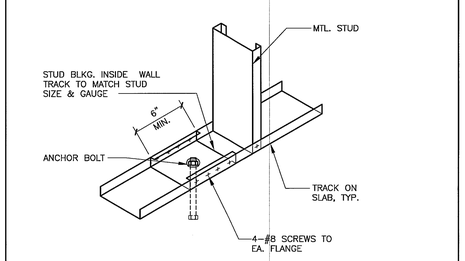

28574_D123A

STUD WASHER AT HEADED ANCHOR

SCALE 1 1/2"=1'-0" | 9

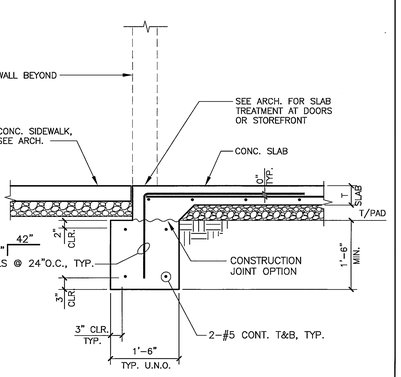

28574_D51C

TYP. EXTERIOR WALL FTG. AT OPNG.

SCALE 3/4"=1'-0" | 5

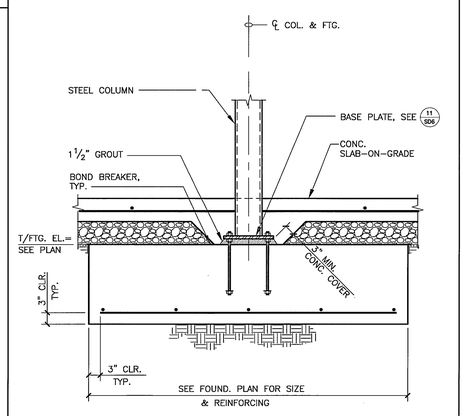

SWATT | MIERS ARCHITECTS

5845 Doyle Street, Suite 104
Emeryville, CA 94608
Tel: 510 985 9779
Fax: 510 985 0116

www.swattmiers.com

BID SET

JAN 19 2010

PREVAILING WAGE JOB

KSP
KSP CONSULTING ENGINEERS, INC.

25341 Commercentre Dr., Ste. 100
Lake Forest, CA 92630
T: 949.380.3970 F: 949.380.3771
email: info@kspeng.com

THIS DRAWING AND THE DESIGN SHOWN ARE THE PROPERTY OF KSP CONSULTING ENGINEERS, INC. THE PRODUCTION, COPYING OR OTHER USE OF THIS DRAWING WITHOUT THEIR WRITTEN CONSENT IS PROHIBITED AND ANY INFRINGEMENT WILL BE SUBJECT TO LEGAL ACTION.

PALM SPRINGS ANIMAL CARE FACILITY

4575 E. MESQUITE AVE.
PALM SPRINGS, CA 92262

Issue

Rev	Date	Description
	08/19/09	DD SET
	10/01/09	50% CD
	10/22/09	PROGRESS SET
	11/23/09	BUILDING PERMIT SET
1	01/04/10	BLDG. PERMIT RESUBMITTAL
	01/18/10	BID SET

Drawn By	DC, EA
Checked By	JH
Job No.	28574
Issue Date	12/29/09
Scale	AS NOTED

Drawing Title

SECTIONS & DETAILS

NOT FOR CONSTRUCTION

SD2

Sheet

This drawing and the designs shown are the property of KSP Consulting Engineers, Inc. The production, copying or other use of this drawing without their written consent is prohibited and any infringement will be subject to legal action.

January 13,2010 - 5:58 pm ; User: dc ; K:\Swatt-Meires\Animal Shelter - Palm Springs\28574_S02.dwg