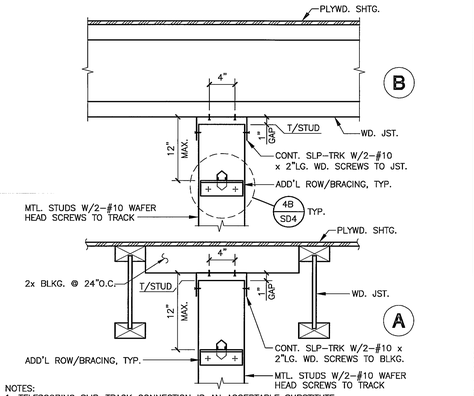

NOTES:
1. TELESCOPING SLIP-TRACK CONNECTION IS AN ACCEPTABLE SUBSTITUTE.
2. FOR ADDITIONAL INFORMATION/TREATMENTS SEE ARCH. DWGS.

28574_D106A

PARTITION TO ROOF FRMG.

SCALE 1 1/2"=1'-0" | 20

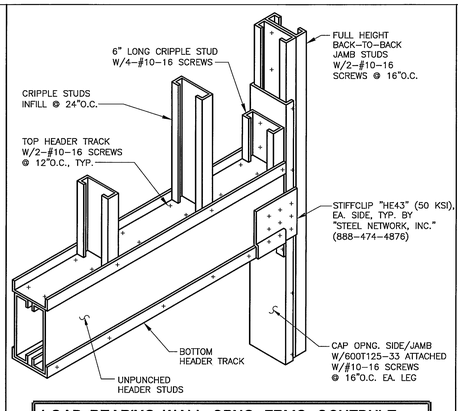

LOAD BEARING WALL OPNG. FRMG. SCHEDULE

WALL HT.	'W' WIDTH MAX.	HEADER	JAMB	STIFFCLIP "HE" (50 KSI) FT1 SCREWS
EXTERIOR WALLS (LATERAL - 25 PSF, DEFLECTION - L/360)				
12'-0" WALL	3'-6"	2-600S137-43 2-600T125-33	2-600S162-33	16-#10
	4'-6"	2-600S137-43 2-600T125-33	2-600S162-43	16-#10
	6'-6"	2-600S162-54 2-600T125-43	2-600S162-43	16-#10
17'-0" WALL	3'-6"	2-600S137-43 2-600T125-33	2-600S162-43	20-#10
	4'-6"	2-600S137-43 2-600T125-33	2-600S162-54	20-#10
	6'-6"	2-600S162-54 2-600T125-33	2-600S200-68	20-#10
20'-0" WALL	6'-6"	2-600S162-54 2-600T125-33	2-600S250-97	20-#10
INTERIOR WALLS (LATERAL - 5 PSF, DEFLECTION - L/240)				
12'-0" WALL	4'-6"	2-600S137-43 2-600T125-33	2-600S162-33	20-#10
	4'-6"	2-600S162-54 2-600T125-33	2-600S162-43	24-#10
	6'-6"	2-600S162-68 2-600T125-33	2-600S162-54	24-#10

NOTE:
1. GENERAL CONTRACTOR TO PROVIDE WEB STIFFENERS AT EACH SUPPORT, TYP.

28574_D96B

LOAD BRG. WALL OPNG. FRMG. SCHED.

SCALE 1"=1'-0" | 15

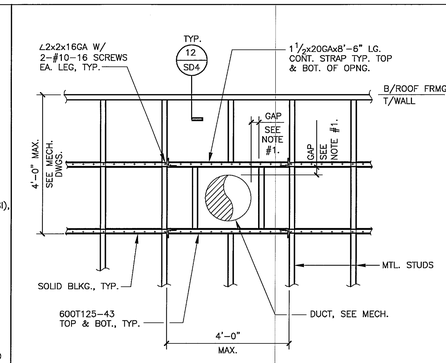

NOTE:
1. FOR ADDITIONAL REQUIREMENTS AT PENETRATION TREATMENT, SEE ARCH. AND/OR MECH. DRAWING.

28574_D120D

WALL PENETRATION

SCALE 1/2"=1'-0" | 12

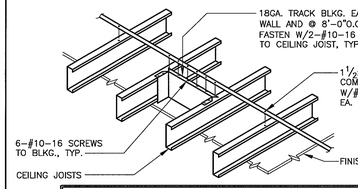

CEILING JOIST SCHEDULE (DL=5PLF, LL=10PLF, LL/240)

MARK	MAX. SPAN	JOIST DESIGNATION	SPACING (O.C.)	REMARKS
GYPSUM BOARD FINISH (DL = 5 PSF, LL = 10 PLF, L/240)				
CJ1	8'-0"	400S162-33	24"	—
CJ2	10'-0"	600S162-33	24"	—
CJ3	14'-0"	600S162-43	24"	CONT. TOP STRAP AT MID POINT
CJ4	16'-0"	800S162-54	24"	CONT. TOP STRAP AT MID POINT
PLASTER FINISH (DL = 15 PSF, LL = 10 PLF, L/360)				
CJ5	10'-0"	800S162-33	24"	SOLID BLKG. @ 48"O.C.
CJ6	12'-0"	800S162-43	24"	
CJ7	14'-0"	800S162-54	24"	
CJ8	16'-0"	800S162-54	12"	

28574_D119C

CEILING JOIST SCHED./BRACING

SCALE 3/4"=1'-0" | 8

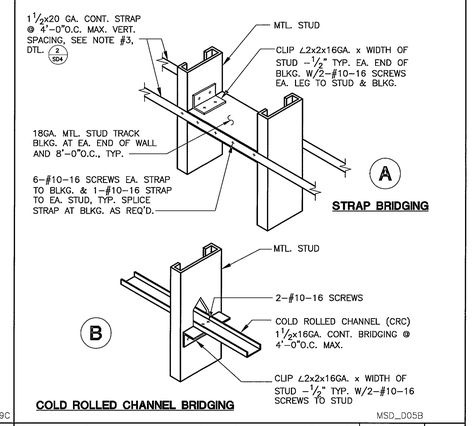

MSD_D05B

TYP. STUD BRACING/BRIDGING

SCALE 1"=1'-0" | 4

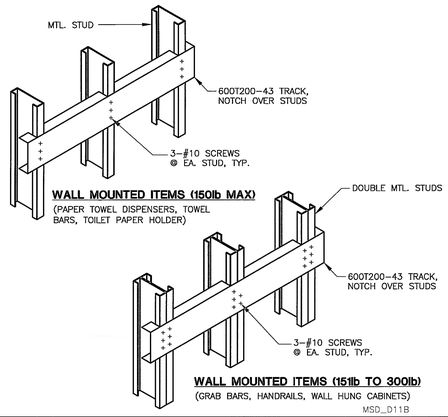

MSD_D11B

BACKING PLATE

SCALE 1"=1'-0" | 19

LOAD BEARING WALL SCHEDULE

LOCATION	MAX. HEIGHT	STUD DESIGNATION	SPACING	BRACING/ BRIDGING
INTERIOR WALLS (LATERAL - 5 PSF, DEFLECTION - L/240)				
TYP. U.N.	14'-0"	600S162-33	16"O.C.	48"O.C.
EXTERIOR WALLS (LATERAL - 25 PSF, DEFLECTION - L/360)				
TYP. U.N.	12'-0"	600S162-33	16"O.C.	48"O.C.
	14'-0"	600S162-43	16"O.C.	
	16'-0"	600S162-54	16"O.C.	
	18'-0"	600S162-68	16"O.C.	
	12'-0"	800S162-33	24"O.C.	
	20'-0"	800S250-68	16"O.C.	
LINE (2) BTWN (D) & (E)	18'-0"	2-600S162-33 BACK-TO-BACK	16"O.C.	

28574_D97B

LOAD BEARING WALL SCHEDULE

SCALE 1"=1'-0" | 11

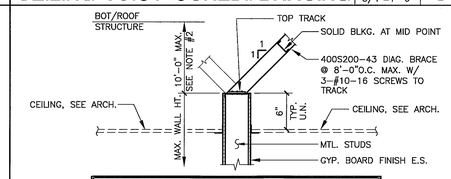

TOP TRACK BRACING SCHEDULE

MAX. WALL HT.	STUD DESIGNATION (1)	SPACING (O.C.)	TOP TRACK DESIGNATION: BRACE E.S./ WALL (3)	TOP TRACK DESIGNATION: BRACE ONE SIDE (4)
8'-0"	400S137-33	24"	400T125-33	400T125-43
10'-0"	400S137-33	24"	400T125-33	400T125-43
12'-0"	400S137-33	24"	400T125-33	400T125-43
	600S137-33	24"	600T125-33	600T125-43
14'-0"	400S137-33	24"	400T125-33	400T125-43
	600S137-33	24"	600T125-33	600T125-43

NOTES:
1. DEPTH OF STUDS SHALL BE AS INDICATED ON ARCH. DRAWINGS.
2. IN CASE HEIGHT BETWEEN TOP TRACK AND BOTTOM/ROOF STRUCTURE EXCEEDS 10'-0" CONTACT ENGINEER FOR RECOMMENDATION.
3. SPACE DIAGONAL BRACES @ 4'-0"O.C. STAGGERED ON EA. SIDE OF WALL, TYP.
4. USE BRACES @ 8'-0"O.C. ON ONE SIDE ONLY WHERE IS SHOWN ON ARCH. DRAWINGS.

28574_D108C

BRACING SCHEDULE

SCALE 3/4"=1'-0" | 7

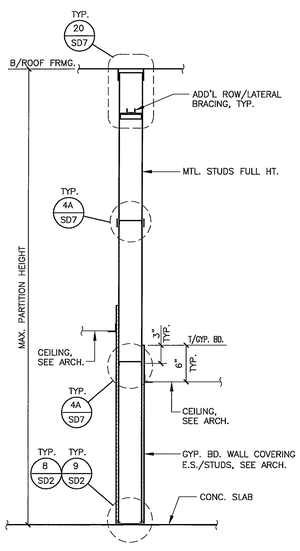

PARTITION HEIGHT SCHEDULE (LATERAL - 5 PSF, L/240)

MAX. HT.	STUD DESIGNATION	SPACING (O.C.)	BOT. TRACK DESIGNATION	TOP SLOTTED TRACK W/3"DP. LEGS
16'-0"	400S137-33	24"	400T125-33	SLP-TRK-43
18'-0"	400S162-33	16"	400T125-33	SLP-TRK-43
18'-0"	600S137-33	24"	600T125-33	SLP-TRK-43

LATERAL BRACING NOTES:
1. ADEQUATE LATERAL BRACING OF STUD FLANGES SHALL BE PROVIDED IMMEDIATELY AFTER ERECTION TO PROVIDE RESISTANCE TO STUD ROTATION AND MINOR AXIS BENDING. BOTH STUD FLANGES MUST BE BRACED.
2. FLANGE BRACING MAY BE ACCOMPLISHED BY ONE OR MORE OF THE FOLLOWING METHODS:
   A. GYPSUM WALL BOARD ATTACHED WITH #6 SCREWS @ 12"O.C.
   B. PLYWOOD SHEATHING ATTACHED WITH #8 SCREWS @ 12"O.C.
   C. HORIZONTAL BRACING/BRIDGING PER STUD MANUFACTURER'S RECOMMENDATIONS AND/OR DETAIL 4/SD4.
3. WHERE WALL COVERING IS PROPERLY INSTALLED THE HORIZONTAL BRACING MAY BE OMITTED AT THE COVERED AREA. WHERE WALL COVERING IS NOT INSTALLED FULL HEIGHT OR IS INSTALLED ON ONE SIDE ONLY, HORIZONTAL BRACING IS REQUIRED. ALL UNCOVERED STUDS REQUIRE FLANGE BRACING AT 4'-0"O.C. MAX.
4. ALL STUD SIZES INDICATED WITHIN THESE DRAWINGS ASSUME PROPER FLANGE BRACING.

28574_D111C

MTL. STUD PARTITION SCHEDULE

SCALE 3/4"=1'-0" | 2

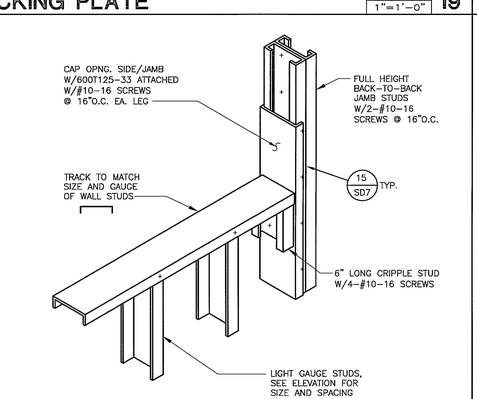

28574_D115B

SILL DETAIL

SCALE 1"=1'-0" | 18

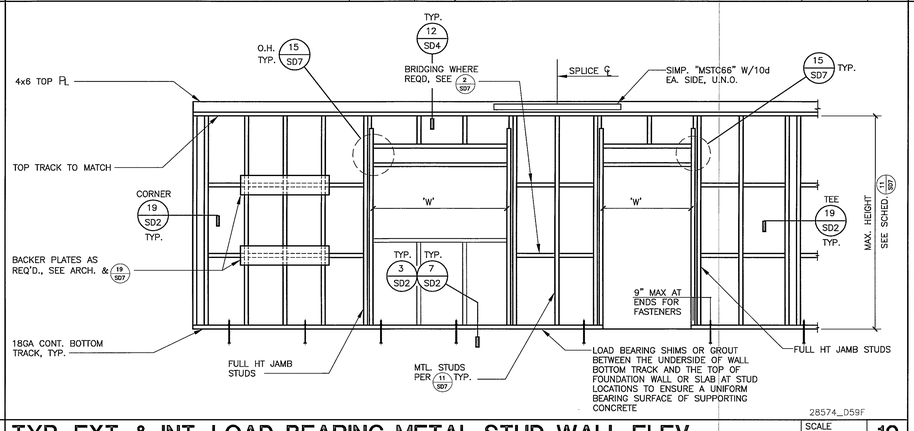

28574_D59F

TYP. EXT. & INT. LOAD BEARING METAL STUD WALL ELEV.

SCALE 1/8"=1'-0" | 10

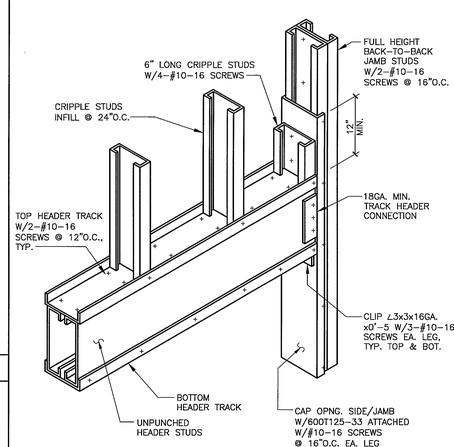

PARTITION OPNG. FRMG. SCHEDULE

'W' WIDTH MAX.	HEADER	JAMB
6'-0"	2-600S162-33 2-600T125-33	2-600S162-33
8'-0"	2-600S162-33 2-600T125-33	2-600S162-43
12'-0"	2-600S162-43 2-600T125-43	2-600S162-43
16'-0"	2-800S200-43 2-600T125-54	2-600S162-54

NOTE:
1. GENERAL CONTRACTOR PROVIDE WEB STIFFENERS AT EACH SUPPORT, TYP.

28574_D112B

PARTITION OPNG. FRMG. SCHEDULE

SCALE 1"=1'-0" | 5

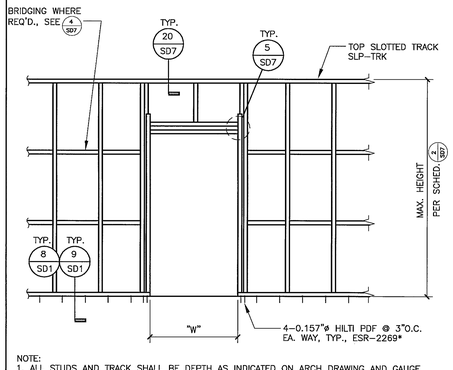

NOTE:
1. ALL STUDS AND TRACK SHALL BE DEPTH AS INDICATED ON ARCH DRAWING AND GAUGE AS DETERMINED BY THE HEIGHT OF THE WALL PER SCHEDULE 2 SD7

28574_D110H

MTL. STUD PARTITION ELEV.

SCALE 3/8"=1'-0" | 1

LIGHT TRACK GAUGE FASTENER SCHEDULE

SYMBOL	CONNECTION TYPE	MIN. FASTENER TYPE	MIN. O.C. SPACING	MIN. EDGE DIST.	REMARKS
FT1	METAL TO METAL 20-14 GAUGE	#10-16x HWH SELF-DRILL	½"	½"	STRUCT. CONNECTIONS, SEE NOTE 4.
FT2	METAL TO METAL LT. GA. TO HVY. GA.	#12-24x HWH SELF-DRILL	1"	½"	L=⅞" FOR COMB. THK. ≤ ¼" L=1¼" FOR COMB. THK. ≤ ½" SEE NOTE #4.
	METAL TO METAL LT. GA. TO HVY. GA.	0.157ø PDF	3"	½"	SEE NOTE 5 HILTI "X-U" PINS ICBO-2269*
FT3	METAL TO CONC.	0.157ø x 1½" PDF	4"	3" @ CONC. ½" @ MTL.	HILTI "X-U" PINS ICBO-2269*
FT4	LT. GA. TO WOOD	SDS¼x2½	1½"	1¾"	ICBO-ESR-2236*

NOTES:
1. LIGHT GAUGE = 14GA. AND THINNER.
2. ALL FASTENERS LISTED ABOVE SHALL BE ICBO APPROVED.
3. ALL FASTENERS SHALL BE OF SUFFICIENT LENGTH A MIN. OF THREE THREADS EXTENSION BEYOND MATERIALS BEING ATTACHED.
4. PROVIDE HEX WASHER HEAD W/NEOPRENE WASHER WHERE WATER TIGHT SEAL IS NECESSARY.
5. FASTENER POINT MUST PENETRATE THRU THE STEEL TO OBTAIN FULL VALUE, U.N.O. FOR ¾" THICK STEEL ½" PENETRATION IS REQUIRED.

28574_D129C

TYPICAL FASTENER SCHEDULE

SCALE 3/4"=1'-0" | 17

SHEAR WALL SCHEDULE

MARK NO.	PLYWOOD (1) SHEATHING	NO. OF SIDES	SCREWS (4) SPACING: EDGE	SCREWS (4) SPACING: INTERMEDIATE	BLK'G @ PNL. EDGES	TRACK TO 4x NAILER W/WOOD SCREWS (8)	WOOD BLKG TO 4x NAILER	TRACK TO CONCRETE W/HEADED ANCHORS(7)	ALLOWABLE SHEAR (9): WIND	ALLOWABLE SHEAR (9): SEISMIC
1	15/32"	ONE	6"O.C.	12"O.C.	YES	SDS¼x2 @ 6"O.C.	SIMP. "A35" @ 12"O.C.	⅝"ø @ 24"O.C.	533 PLF	356 PLF
2	15/32"	ONE	4"O.C.	12"O.C.	YES	SDS¼x2 @ 4"O.C.	SIMP. "LS50" @ 12"O.C.	⅝"ø @ 16"O.C.	705 PLF	532 PLF
3	15/32"	BOTH	6"O.C.	12"O.C.	YES	2 ROWS STAGG. SDS¼x2 @ 6"O.C.	SIMP. "A35" @ 6"O.C.	⅝"ø @ 12"O.C.	1066 PLF	712 PLF
4	15/32"	BOTH	4"O.C.	12"O.C.	YES	2 ROWS STAGG. SDS¼x2 @ 4"O.C.	SIMP "LS50" @ 6"O.C.	⅝"ø @ 12"O.C.	1410 PLF	1064 PLF

NOTES:
1. PLYWOOD GRADE SHALL BE STRUCTURAL 1 RATED SHEATING, 4 PLIES, SPAN RATING 32/16 EXTERIOR GLUE. PANELS SHALL BE APPLIED EITHER HORIZONTALLY OR VERTICALLY.
2. ALL EDGES OF PLYWOOD PANELS SHALL BE BLOCKED. ⅛" GAP SHALL BE PROVIDED BETWEEN PANELS.
3. ALL VERTICAL STUDS SHOULD BE SPACED AT 24"O.C. MAXIMUM.
4. PLYWOOD FASTENERS SHALL BE A MINIMUM #8x1" FLAT-HEAD SELF-DRILLING SCREWS WITH A MINIMUM HEAD DIAMETER OF 0.285" AND IN COMPLIANCE WITH ASTM C1513.
5. FASTENERS ALONG THE PLYWOOD EDGES SHALL BE PLACED NOT LESS THAN ⅜" IN FROM PANEL EDGES.
6. TRACK FASTENERS TO WOOD NAILER SHALL BE SIMPSON SERIES WOOD SCREWS IN COMPLIANCE WITH ICC ESR-2236* AND SHALL BE INSTALLED IN PREDRILLED OR PREPUNCHED HOLES NO GREATER THAN 0.273"ø.
7. CONTINUOUS BOTTOM TRACK SHOULD BE 18GA TYP.
   EXCEPTION: USE 16GA MIN. AT SHEAR WALLS MARK 4.
   HEADED ANCHOR BOLTS WITH 7" MIN. EMBEDMENT SHALL HAVE STUD WASHER PER 9 SD9 TYP.
8. HOLDOWN HARDWARE MUST BE SECURED IN PLACE PRIOR TO FOUNDATION INSPECTION.
9. ALLOWABLE SHEAR IS PER AISI STANDARD FOR COLD-FORMED STEEL FRAMING-LATERAL DESIGN, 2004 EDITION, TABLE C2.1-1 AND C2.1-3.

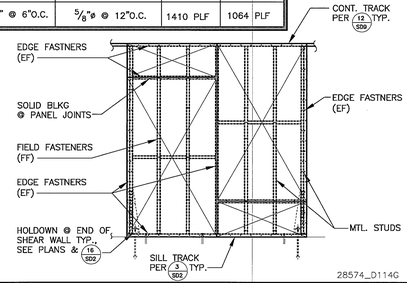

28574_D114G

SHEAR WALL SCHEDULE

SCALE 3"=1'-0" | 9

SWATT | MIERS ARCHITECTS
5845 Doyle Street, Suite 104
Emeryville, CA 94608
Tel: 510 985 9779
Fax: 510 985 0116
www.swattmiers.com

JAN 19 2010

PREVAILING WAGE JOB

BID SET

THIS DRAWING AND THE DESIGN SHOWN ARE THE PROPERTY OF KSP CONSULTING ENGINEERS, INC. THE REPRODUCTION, COPYING OR OTHER USE OF THIS DRAWING WITHOUT THEIR WRITTEN CONSENT IS PROHIBITED AND ANY INFRINGEMENT WILL BE SUBJECT TO LEGAL AVOIDANCE.

KSP
KSP CONSULTING ENGINEERS, INC.
25341 Commercentre Dr., Ste. 100
Lake Forest, CA 92630
T: 949.380.0970 F: 949.380.9771
email: info@kspeng.com

PALM SPRINGS ANIMAL CARE FACILITY

4575 E. MESQUITE AVE.
PALM SPRINGS, CA 92262

Issue

Rev	Date	Description
	08/19/09	DD SET
	10/01/09	50% CD
	10/22/09	PROGRESS SET
	11/23/09	BUILDING PERMIT SET
1	01/04/10	BLDG. PERMIT RESUBMITTAL
	01/18/10	BID SET

Drawn By	DC, EA
Checked By	JH
Job No.	28574
Issue Date	12/29/09
Scale	AS NOTED

Drawing Title

SECTIONS & DETAILS

NOT FOR CONSTRUCTION

Sheet SD7

This drawing and the design shown are the property of KSP Consulting Engineers, Inc. The production, copying or other use of this drawing without their written consent is prohibited and any infringement will be subject to legal action.

January 13,2010 - 5:57 pm ; User: dc ; K:\Swatt-Meiers\Animal Shelter - Palm Springs\28574_SD7.dwg