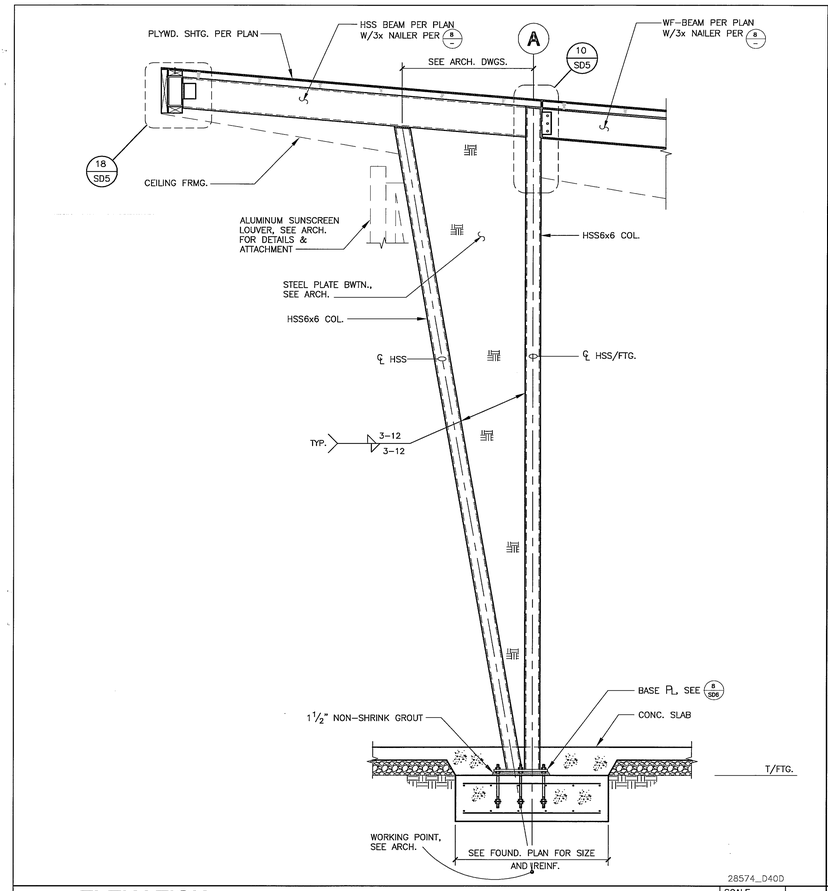

28574_D40D

ELEVATION

SCALE 1/2"=1'-0" | 15

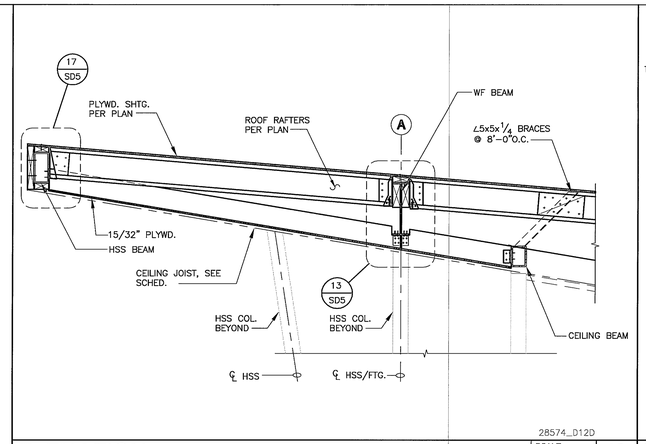

28574_D12D

ELEVATION

SCALE 1/2"=1'-0" | 12

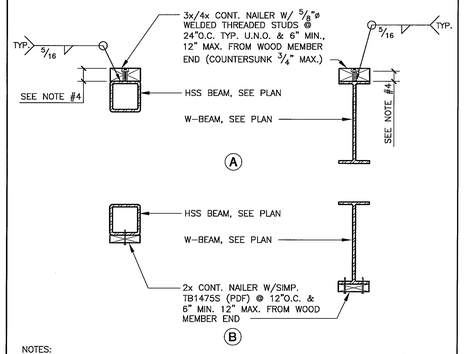

NOTES:
1. WIDTH OF NAILER TO MATCH FLANGE OF BEAM OR WIDTH OF HSS (+1/4" MAX./-1/8")
2. BOLTS HOLES SHALL BE OVERSIZE TO A MAXIMUM 1/16" LARGER THAN THE BOLT DIAMETER
3. BOLTS SHALL NOT BE FORCIBLY DRIVEN
4. MAINTAIN 2" MIN. NAILER THICKNESS AT BEVEL CONDITION.

28574_D31B

NAILER TO BM.

SCALE 1"=1'-0" | 8

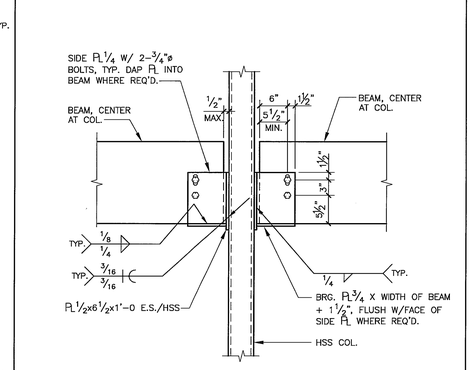

28574_D117B

BEAM TO COLUMN

SCALE 1"=1'-0" | 4

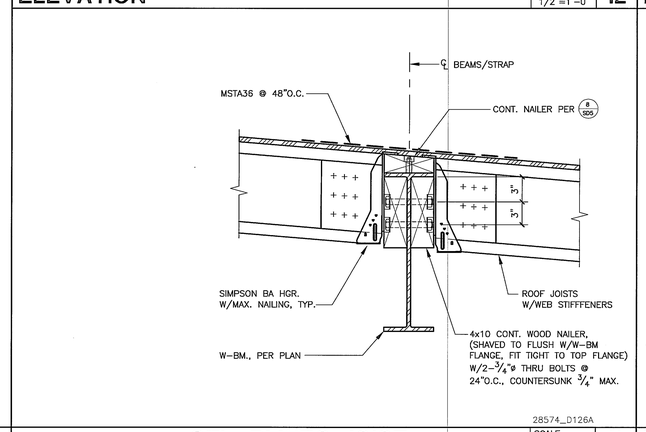

28574_D126A

STL. BM. TO JOIST

SCALE 1 1/2"=1'-0" | 11

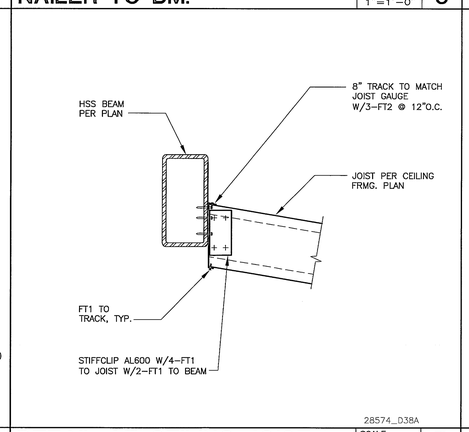

28574_D38A

DETAIL AT CEILING JOIST

SCALE 1 1/2"=1'-0" | 7

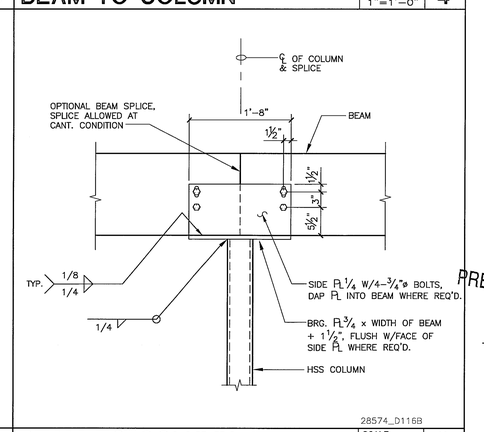

28574_D116B

BEAM TO COLUMN

SCALE 1"=1'-0" | 3

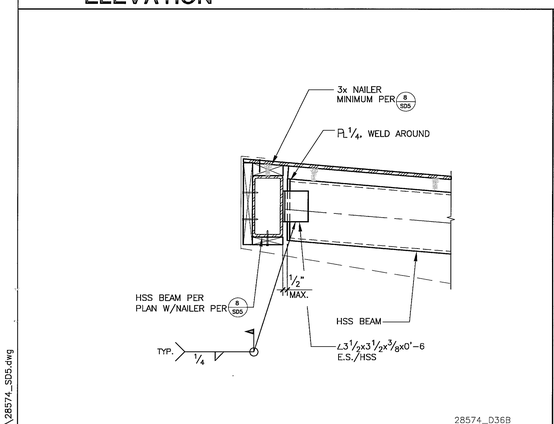

28574_D36B

SECTION

SCALE 1"=1'-0" | 18

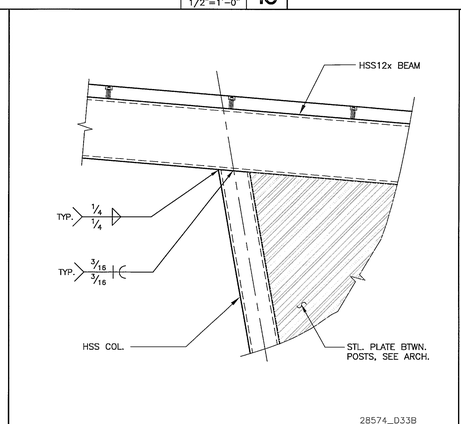

28574_D33B

SECTION

SCALE 1"=1'-0" | 14

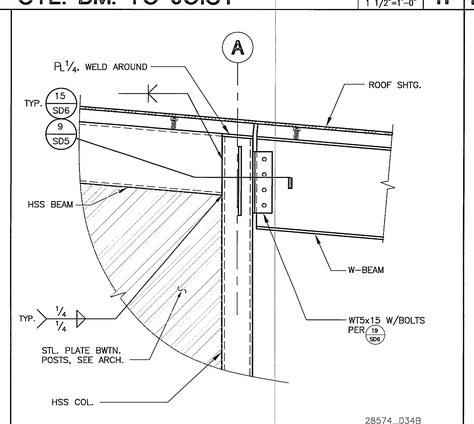

28574_D34B

SECTION

SCALE 1"=1'-0" | 10

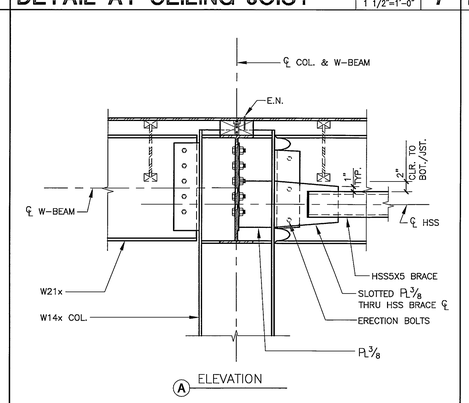

A ELEVATION

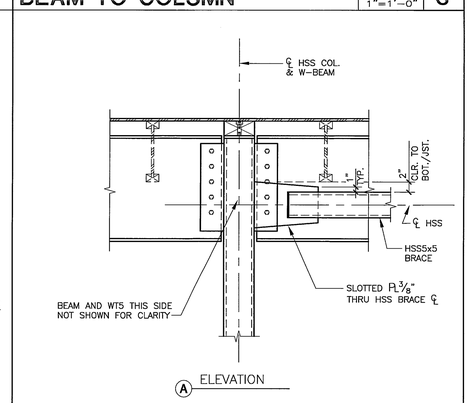

A ELEVATION

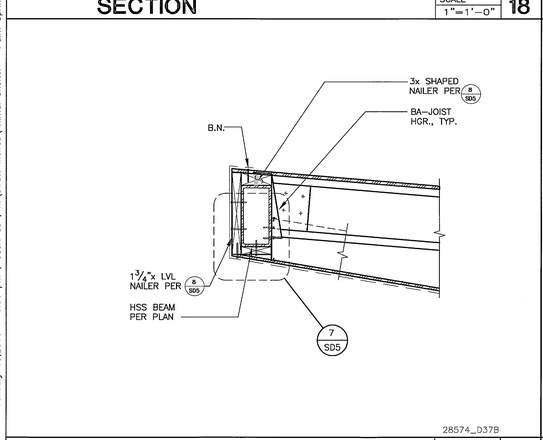

28574_D37B

SECTION

SCALE 1"=1'-0" | 17

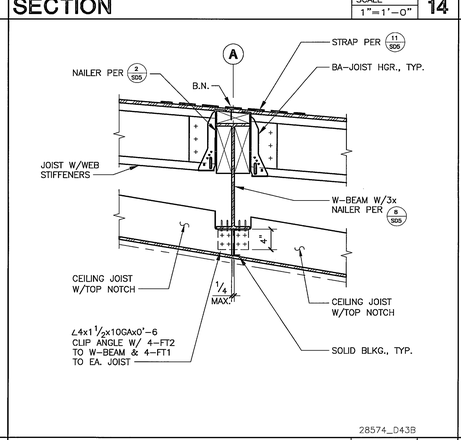

28574_D43B

SECTION

SCALE 1"=1'-0" | 13

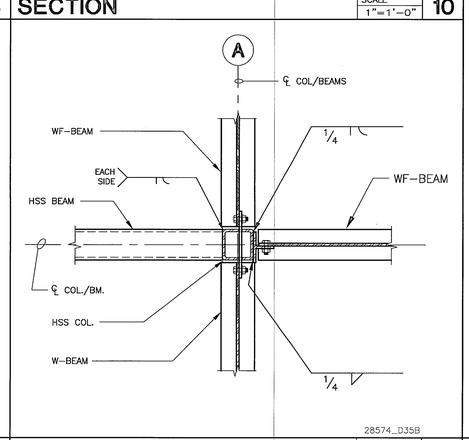

28574_D35B

PLAN VIEW

SCALE 1"=1'-0" | 9

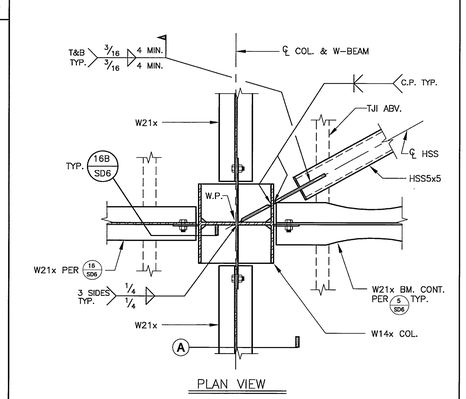

PLAN VIEW

NOTE:
1. REFER TO 5/SD6 AND 7/SD6 FOR ADDITIONAL INFORMATION.

28574_D74B

BRACE TO COLUMN CONNECTION

SCALE 1"=1'-0" | 5

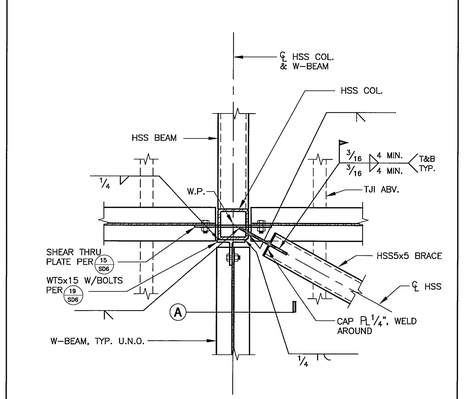

NOTE:
1. FOR INFO. NOT NOTED, SEE 5/SD5

28574_D136B

BRACE TO COLUMN CONNECTION

SCALE 1"=1'-0" | 1

SWATT | MIERS ARCHITECTS

5845 Doyle Street,
Suite 104
Emeryville, CA 94608
Tel: 510 985 9779
Fax: 510 985 0116

www.swattmiers.com

JAN 19 2010

BID SET

PREVAILING WAGE JOB

THIS DRAWING AND THE DESIGN SHOWN ARE THE PROPERTY OF KSP CONSULTING ENGINEERS, INC. THE PROPERTY OF KSP CONSULTING ENGINEERS, INC. THE PROCURING OF THE ORIGINAL PROJECT FOR WHICH THIS DRAWING WAS PREPARED. NO REPRODUCTION OR DISCLOSURE TO OTHERS WITHOUT WRITTEN CONSENT IS PERMITTED.

KSP

KSP CONSULTING ENGINEERS, INC.

25341 Commercentre Dr., Ste. 100
Lake Forest, CA 92630
T: 949.380.2970 F: 949.380.3771
email: info@kspeng.com

PALM SPRINGS ANIMAL CARE FACILITY

4575 E. MESQUITE AVE.
PALM SPRINGS, CA 92262

Issue

Rev	Date	Description
	08/19/09	DD SET
	10/01/09	50% CD
	10/22/09	PROGRESS SET
	11/23/09	BUILDING PERMIT SET
1	01/04/10	BLDG. PERMIT RESUBMITTAL
	01/18/10	BID SET

Drawn By	DC, EA
Checked By	JH
Job No.	28574
Issue Date	12/29/09
Scale	AS NOTED

Drawing Title

SECTIONS & DETAILS

NOT FOR CONSTRUCTION

SD5

Sheet

This drawing and the design shown are the property of KSP Consulting Engineers, Inc. The production, copying or other use of this drawing without their written consent is prohibited and any infringement will be subject to legal action.

January 13,2010 - 5:56 pm : User: dc : K:\Swatt-Meiers\Animal Shelter - Palm Springs\28574_SD5.dwg